PROPOSED LIQUID PROPANE STORAGE FACILITY

FOR

DOWNEY ENERGY COMPANY

TOWN OF WAPPINGER, DUTCHESS COUNTY, NY

GENERAL NOTES

1. NOTHING SHALL BE PLACED, PLANTED, SET OR PUT WITHIN AN AREA OF AN EASEMENT THAT WOULD ADVERSELY AFFECT THE FUNCTION OF THE EASEMENT.
2. THE CONTRACTOR SHALL NOTIFY ALL APPROPRIATE UTILITIES AT LEAST 72 HOURS PRIOR TO THE START OF ANY CONSTRUCTION. ALL UTILITIES HAVE BEEN IDENTIFIED BASED ON THE BEST AVAILABLE INFORMATION AND LISTED ON THESE PLANS IN ACCORDANCE WITH ACT 187 REQUIREMENTS. THE CONTRACTOR SHALL VERIFY THE LOCATIONS OF EXISTING UTILITIES AND ALL EFFORTS SHALL BE UNDERTAKEN TO PROTECT EXISTING UTILITIES AND MAINTAIN UNINTERRUPTED SERVICE. ANY DAMAGE TO UTILITIES BY THE CONTRACTOR SHALL BE REPAIRED IMMEDIATELY AT THE CONTRACTOR'S EXPENSE. RESTORATION OF ALL EXISTING SURFACE IMPROVEMENTS DAMAGED OR ALTERED DURING CONSTRUCTION, INCLUDING LANDSCAPING, SHALL ALSO BE THE RESPONSIBILITY OF THE CONTRACTOR.
3. THE CONTRACTOR SHALL MAKE PROVISIONS FOR MAINTAINING THE SAFE FLOW OF TRAFFIC DURING CONSTRUCTION WITHIN THE SITE AND THE EXISTING ROAD RIGHTS-OF-WAY WHILE ENTERING AND LEAVING THE SITE.
4. THE CONTRACTOR SHALL BE RESPONSIBLE FOR OBTAINING ANY PERMITS RELATIVE TO THE CONSTRUCTION PROPOSED ON THIS PLAN.
5. ALL STORM SEWERS AND APPURTENANCES SHALL BE CONSTRUCTED IN ACCORDANCE WITH THE APPROVED PLANS AND TO THE STANDARDS OF THE MUNICIPAL ORDINANCES.
6. THERE SHALL BE NO CHANGES OR DEVIATION FROM THESE PLANS UNLESS APPROVED BY THE ENGINEER. SUCH PLAN CHANGES, SHOULD THEY BECOME NECESSARY, ARE SUBJECT TO APPROVAL BY THE TOWN OF WAPPINGERS FALLS ENGINEER.
7. THE CONTRACTOR SHALL INSPECT EXISTING SITE/PROJECT AREA CONDITIONS AND VERIFY ALL QUANTITIES AND MATERIALS PRIOR TO THE START OF CONSTRUCTION.

N.Y.S. INDUSTRIAL CODE RULE 753

1-800-962-7962

CALL BEFORE YOU DIG , DRILL OR BLAST
NO LESS THAN TWO WORKING DAYS NOTICE
IT'S THE LAW !

(x)	PREVIOUS REVISIONS	
1	2/8/21	REVISED PER TOWN CONSULTANT COMMENTS
2	2/25/21	REVISED FOR DCDOH SUBMITTAL
3	3/24/21	REVISED PER TOWN CONSULTANT COMMENTS

SITE INFORMATION

TAX MAP NUMBER	6156-02-763656
TOTAL AREA	6.29± ACRES (273,992 SF)
LAND OWNER / DEVELOPER	DOWNEY ENERGY PO BOX 306 COLD SPRING, NY 10516
SITE ADDRESS:	199 OLD ROUTE 9 TOWN OF WAPPINGER DUTCHESS COUNTY, NY
EXISTING USE	VACANT LAND
PROPOSED USE	LIQUID PROPANE STORAGE FACILITY

REFERENCE MAPS

1. EXISTING CONDITIONS SURVEY PREPARED BY ROBERT OICLE, LS, DATED JUNE 6, 2019.

BULK TABLE REQUIREMENTS

HB – HIGHWAY BUSINESS ZONING DISTRICT

USE: LIQUID PROPANE STORAGE	REQUIRED	PROVIDED
MINIMUM LOT AREA	5 ACRES	6.29 ACRES
MINIMUM LOT WIDTH	150 FT	220 FT
MINIMUM LOT DEPTH	200 FT	616 FT
MINIMUM LOT FRONTAGE	150 FT	220 FT
MINIMUM FRONT YARD	100 FT (BLDG)/100 FT (TANKS)	119 FT (BLDG) / 133 FT (TANKS)
MINIMUM REAR YARD	30 FT (BLDG)/75 FT (TANKS)	435 FT (BLDG) / 461 FT (TANKS)
MINIMUM SIDE YARD	10 FT (BLDG)/75 FT (TANKS)	35 FT (BLDG) / 75 FT (TANKS)
MAXIMUM BUILDING HEIGHT	35 FT/2.5 STYS.	25 FT/2 STORIES
MAXIMUM BUILDING COVERAGE	25% / 68,498 SF	25 SF BLDG / 1,430 SF TANKS / 3,230 SF TOTAL (1.18%)
MAXIMUM IMPERVIOUS	75% / 205,494 SF	29,160 SF (10.2%)
MINIMUM SPACE BETWEEN TANKS	10 FT	10 FT

LIST OF DRAWINGS

1 OF 17. . . . . .COVER SHEET
2 OF 17 . . . . . .EXISTING CONDITIONS PLAN
3 OF 17. . . . . .SITE PLAN
4 OF 17. . . . . .DETAILED SITE PLAN
5 OF 17. . . . . .GRADING & DRAINAGE PLAN
6 OF 17. . . . . .EROSION CONTROL PLAN
7 OF 17. . . . . .UTILITY PLAN
8 OF 17. . . . . .LANDSCAPING PLAN & NOTES
9 OF 17. . . . . .PHOTOMETRIC PLAN
10 OF 17. . . . . .VEHICLE MOVEMENT PLAN
11 OF 17. . . . . .SITE DETAILS
12 OF 17. . . . . .SITE DETAILS
13 OF 17. . . . . .SITE DETAILS
14 OF 17. . . . . .SITE DETAILS
15 OF 17. . . . . .SITE DETAILS
16 OF 17. . . . . .SITE DETAILS
17 OF 17. . . . . .SANITARY SEWER DISPOSAL SYSTEM PLAN

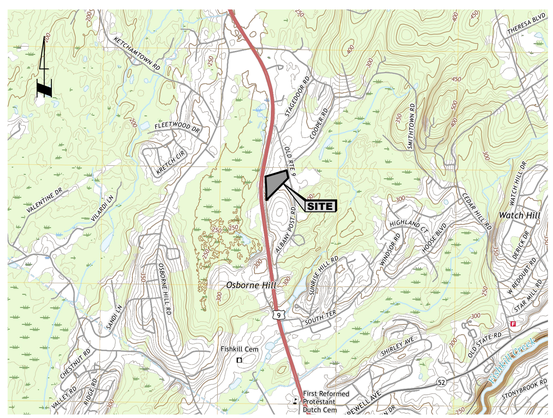

SITE LOCATION MAP

SOURCE: HOPEWELL JUNCTION USGS QUAD SCALE: 1" = 2000'

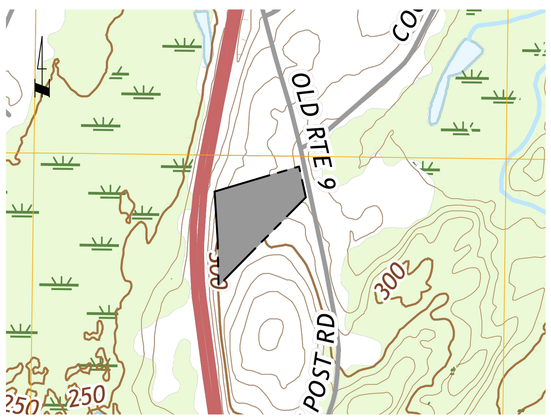

AREA MAP

SCALE: 1" = 500'

TOWN OF WAPPINGER
PLANNING BOARD SITE PLAN APPROVAL
WAPPINGERS FALLS, NEW YORK

THE SITE PLAN FOR THE PROPERTY AS DEPICTED HEREON WAS APPROVED BY THE TOWN OF WAPPINGER PLANNING BOARD AT A MEETING HELD ON _____, AND THE CONDITIONS OF THE SITE PLAN APPROVAL HAVE BEEN SATISFIED OR ARRANGEMENTS HAVE BEEN MADE TO ENSURE THE COMPLETION OF ANY OUTSTANDING OR INCOMPLETE CONDITIONS.

CHAIRMAN _____ DATE _____

OWNER / APPLICANT SIGNATURES

THE UNDERSIGNED APPLICANT(S) FOR THE PROPERTY AND THE UNDERSIGNED OWNER(S) OF THE PROPERTY SHOWN HEREON, CERTIFY THAT THEY ARE FAMILIAR WITH THIS MAP, ITS NOTES AND ITS CONTENTS AS STATED HEREON INCLUDING ALL CONDITIONS OF APPROVAL. THE APPLICANT(S) AND OWNER(S) UNDERSTAND THEIR OBLIGATION TO THE TOWN TO KEEP THIS PREMISES AS PER PLAN APPROVAL BY THE TOWN PLANNING BOARD UNTIL A NEW OR REVISED PLAN FOR DEVELOPMENT OR USE OF THE SITE IS APPROVED BY THE PLANNING BOARD. THE APPLICANT(S) AND OWNER(S) UNDERSTAND THEIR OBLIGATION TO THE TOWN NOT TO OCCUPY THE PREMISES BEFORE A CERTIFICATE OF OCCUPANCY (CO) IS ISSUED BY THE TOWN FOR THE OCCUPANCY AS APPROVED HEREON.

OWNER _____ DATE _____

APPLICANT _____

REVISIONS	BY
01/04/2021	1
02/15/2021	2
03/24/2021	3

ALFRED A. CAPPELLI Jr., AIA
ARCHITECT
1136 ROUTE 9 WAPPINGERS FALLS, N.Y. 12590
Phone: (845) 632-6500
acappe2102@aol.com

PROPOSED LIQUID PROPANE STORAGE FACILITY
DOWNEY ENERGY
TOWN OF WAPPINGERR. N.Y.
199 OLD ROUTE 9

COVER SHEET

DATE	11/30/2020
SCALE	N/A
DRAWN	SW JR
JOB	19-013
SHEET	G-1

File: D:\WKU CAD\2020-09-10 DOWNEY\DOWNEY-S-00-COVER SHEET.dwg Layout: SHEET G-1 User: SAMWAZENEGGER Mar 25, 2021 - 8:18pm

NORTH

NEW YORK STATE ROUTE 9

N 09°11'00" W
356.85'

N 00°44'14" W
321.01'

N 73°59'10" E
616.00'

S 11°48'30" E
220.00'

S 45°06'30" W
867.12'

OFF-SITE WELL

NYSDEC 100' WETLAND ADJACENT AREA

ELIGIBLE NYSDEC WETLANDS

OLD ROUTE 9

N/F
DIPILATO

NOTES:

1. EXISTING CONDITIONS SURVEY PREPARED BY ROBERT OICLE, LS, AND DATED JUNE 6, 2019 AND REVISED DECEMBER 11, 2020.
2. WETLANDS SHOWN WERE DELINEATED BY MICHAEL NOWICKI WETLAND BIOLOGIST ON JULY 2019 AND VELIDATED BY THE NYSDEC ON 9/13/2019.

30 15 0 30
SCALE IN FEET

REVISIONS	BY
01/04/2021	1
02/15/2021	2
03/24/2021	3

ALFRED A. CAPPELLI Jr., AIA
ARCHITECT
1136 ROUTE 9 WAPPINGERS FALLS, N.Y. 12590
Phone: (845) 632-6500
acappie2102@aol.com

PROPOSED LIQUID PROPANE STORAGE FACILITY
DOWNEY ENERGY
199 OLD ROUTE 9 TOWN OF WAPPINGERR. N.Y.

EXISTING CONDITIONS PLAN

DATE	11/30/2020
SCALE	1" = 30'
DRAWN	SW JR
JOB	19-013
SHEET	S-1

File: D:\MKU CAD\2020-09-10 DOWNEY\DOWNEY-S-01-EXIST COND PLAN.dwg Layout: SHEET S-1 User: SAMUKAZENGOSER Mar 25, 2021 - 8:24pm

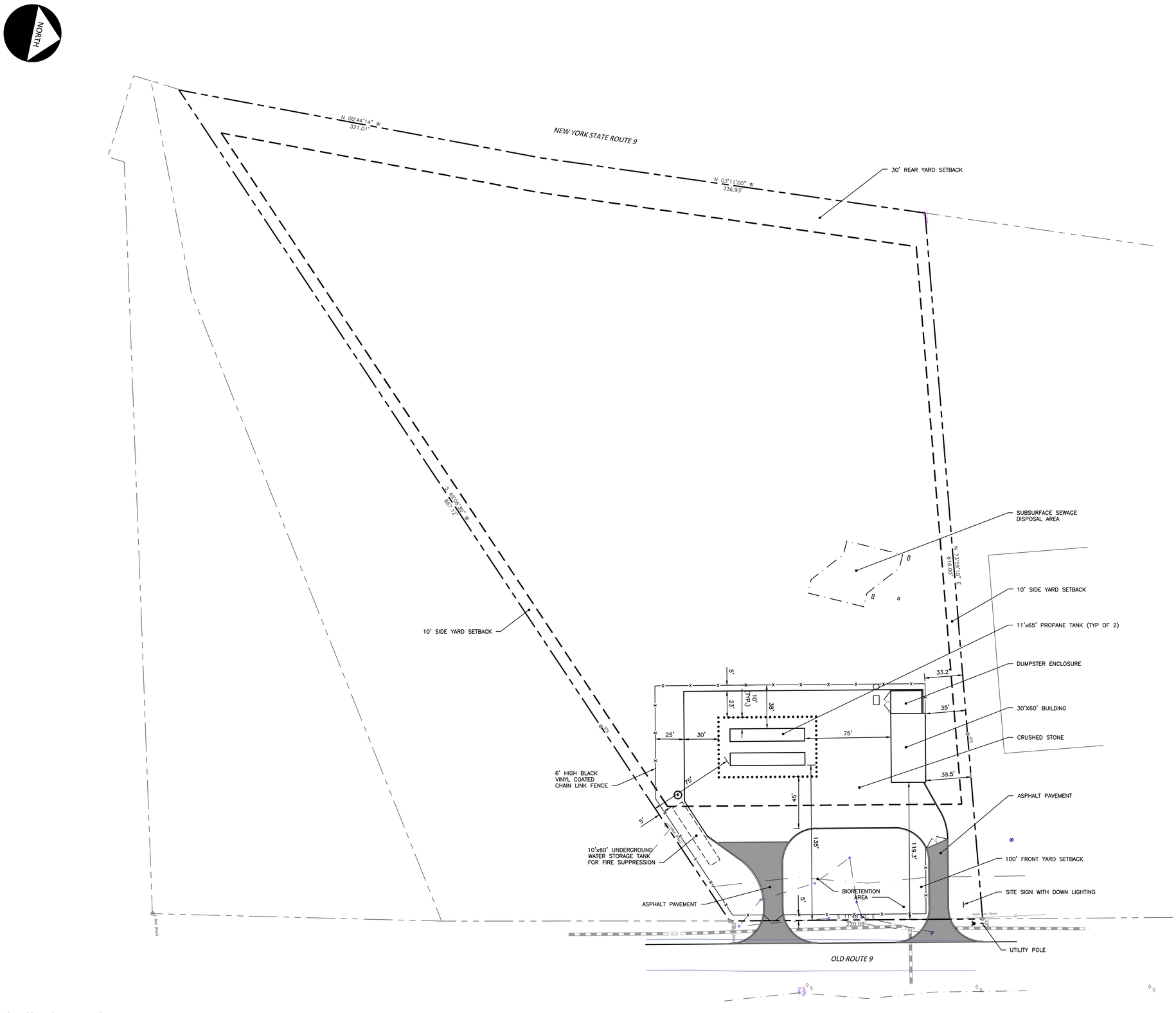

40 20 0 40
SCALE IN FEET

NOTES:

1. REFER TO SHEET S-3 FOR DETAILED SITE PLAN.
2. SIGHT DISTANCE: SLSD RIGHT & LEFT;
   SSD: TSD > 500 LF BOTH DRIVEWAYS.

REVISIONS	BY
01/04/2021	1
02/15/2021	2
03/24/2021	3

ALFRED A. CAPPELLI Jr., AIA
ARCHITECT
1136 ROUTE 9 WAPPINGERS FALLS, N.Y. 12590
Phone: (845) 632-6500
acappie2102@aol.com

PROPOSED LIQUID PROPANE STORAGE FACILITY
DOWNEY ENERGY
199 OLD ROUTE 9 TOWN OF WAPPINGERR. N.Y.

SITE PLAN

DATE	11/30/2020
SCALE	1" = 40'
DRAWN	SW JR
JOB	19-013
SHEET	S-2

File: D:\VKU CAD\2020-09-10 DOWNEY\DOWNEY-S-02-SITE PLAN.dwg Layout: SHEET S-2 User: SAM.MAIZENEGGER Mar 23, 2021 - 7:11pm

NORTH

PROPOSED SUBSURFACE SEWAGE DISPOSAL AREA

PROPOSED BOLLARD (4' O.C., 4' HIGH – SEE DETAIL 4, SHT S-14)

PROPOSED (2) – 10' GATES

DUMPSTER ENCLOSURE

11'x65' PROPANE TANK

11'x65' PROPANE TANK

30'x60' BUILDING

PROPOSED 6' HIGH BLACK VYNIL COATED CHAIN LINK FENCE

UNDERGROUND STORM DETENTION SYSTEM

CRUSHED STONE

LIMIT OF PAVEMENT

LIMIT OF CONCRETE CURB

ONE WAY

BIORETENTION AREA

3,010 SF DISTURBANCE WITHIN ACOE JURISDICTIONAL WETLAND

ASPHALT PAVEMENT

PROPOSED DOUBLE GATE (TYP OF 2)

LIMIT OF CONCRETE CURB

LIMIT OF CONCRETE CURB

LIMIT OF CONCRETE CURB

OLD ROUTE 9

40 SF DISTURBANCE WITHIN ACOE JURISDICTIONAL WETLAND

LIMIT OF CONCRETE CURB

10' STRAIGHT TANGENT WITH 2' TAPER (TYP)

LIMIT OF CONCRETE CURB

PROVIDE KNOX BOX ON BOTH GATES FOR FIRE DEPARTMENT ACCESS

ASPHALT PAVEMENT

10,392 SF DISTURBANCE WITHIN NYSDEC JURISDICTIONAL ADJACENT AREA

SITE SIGN WITH DOWN LIGHTING

UTILITY POLE

30'R (TYP)

20 10 0 20

SCALE IN FEET

File: I:\MOJ CAD\2020-09-10 DOWNEY\DOWNEY-S-03-DETAILED SITE PLAN.dwg Layout: SHEET S-3 User: SAM.MAZENEGGER Mar 25, 2021 - 8:24pm

REVISIONS	BY
01/04/2021	1
02/15/2021	2
03/24/2021	3

ALFRED A. CAPPELLI Jr., AIA
ARCHITECT
1136 ROUTE 9 WAPPINGERS FALLS, N.Y. 12590
Phone: (845) 632-6500
acappie2102@aol.com

PROPOSED LIQUID PROPANE STORAGE FACILITY
DOWNEY ENERGY
199 OLD ROUTE 9 TOWN OF WAPPINGERR. N.Y.

DETAILED SITE PLAN

DATE	11/30/2020
SCALE	1" = 20'
DRAWN	SW JR
JOB	19-013
SHEET	S-3

NORTH

PROPOSED SUBSURFACE SEWAGE DISPOSAL AREA

TW EL = 179.2
BW EL = 178.5

TW EL = 180.5
BW EL = 178.6

TW EL = 184.5
BW EL = 178.7

DUMPSTER ENCLOSURE

11'x65' PROPANE TANK

11'x65' PROPANE TANK

30'x60' BUILDING FF 178.5

SPLITTER 1
RIM EL = 175.7
INV IN (N) EL = 172.3
INV IN (SE) EL = 172.0
INV OUT EL (W) = 172.2
INV OUT EL (NE) = 171.5

STONE ENVELOPE

3 ROWS 72 LF (216 LF) 48" ALUMINIZED CMP INV EL = 170.5

14 LF 15" SICPP @ 2.0%

CB-3
RIM EL = 175.5
INV IN EL = 172.4
INV OUT EL = 172.3

50 LF 15" SICPP @ 1.0%

CB-4
RIM EL = 175.9
INV EL = 172.9

OS-2
RIM EL = 177.6
INV IN EL = 169.5
INV OUT EL = 169.5

88 LF 15" SICPP @ 2.3%

11 LF 8" SICPP @ 2.7%

PRE-TREATMENT -3
RIM EL = 176.0±
INV IN EL = 171.3
INV OUT EL = 171.3

ES-2
INV EL = 171.0

82 LF 15" SICPP @ 0.6%

ES-3
INV EL = 171.0

OS-2
RIM EL = 171.5
INV IN EL (15" NORTH) = 169.0
INV IN EL (6" UNDERDRAIN) = 169.0
INV OUT = 169.0

ES-1
INV EL = 171.0

CB-1
RIM EL = 174.4
INV IN EL = 171.4
INV OUT EL = 171.3

16 LF 15" SICPP @ 1.3%

CB-2
RIM EL = 174.4
INV EL = 171.6

CATCH BASIN TO BE INSTALLED PER TOWN OF WAPPINGER DPW REQUIREMENTS (TYP. OF 6)

DROP CURB AT PROPOSED CATCH BASIN TO ALLOW SWALE DISCHARGE

10 LF 15" SICPP @ 2.0%

EXTEND EXISTING 15" CMP TO NEW CATCH BASIN

CB-A
RIM EL = 173.4
INV EL = 169.4±

CB-B
RIM EL = 173.1
INV EL = 169.2±

PRE-TREATMENT -1
RIM EL = 174.0±
INV IN EL = 171.2
INV OUT EL = 171.2

OLD ROUTE 9

CB-C
RIM EL = 171.7
INV EL = 168.3±

CB-D
RIM EL = 171.7
INV EL = 168.5±

CB-E
RIM EL = 170.0
INV IN (N,S,W) = 167.8
INV OUT = 165.9±

CB-6
RIM EL = 177.8
INV OUT EL = 174.8

36 LF 15" SICPP @ 1.1%

CB-5
RIM EL = 177.4
INV IN EL = 174.4
INV OUT EL = 174.3

CB-7
RIM EL = 174.2
INV IN EL = 171.2
INV OUT EL = 171.2

16 LF 15" SICPP @ 1.3%

CB-8
RIM EL = 174.2
INV EL = 171.4

PRE-TREATMENT -2
RIM EL = 174.0±
INV IN EL = 171.1
INV OUT EL = 171.1

20 LF 15" SICPP @ 6.0%

CB-F
RIM EL = 172.2
INV EL = 168.7±

REPLACE EXISTING CMP WITH 15" SICPP

REPLACE EXISTING CMP WITH 15" SICPP

Wetland 100' Adjacent Area

Chain Link Fence

20 10 0 20
SCALE IN FEET

File: D:\ROJ CAD\2020-09-10 DOWNEY\DOWNEY-S-04-GRADING PLAN.dwg Layout: SHEET S-4 User: SAM.WAZENEGGER Mar 25, 2021 - 8:25pm

REVISIONS	BY
01/04/2021	1
02/15/2021	2
03/24/2021	3

ALFRED A. CAPPELLI Jr., AIA
ARCHITECT
1136 ROUTE 9 WAPPINGERS FALLS, N.Y. 12590
Phone: (845) 632-6500
acappie2102@aol.com

PROPOSED LIQUID PROPANE STORAGE FACILITY
DOWNEY ENERGY
199 OLD ROUTE 9 TOWN OF WAPPINGERR. N.Y.

GRADING & DRAINAGE PLAN

DATE	11/30/2020
SCALE	1" = 20'
DRAWN	SW JR
JOB	19-013
SHEET	S-4

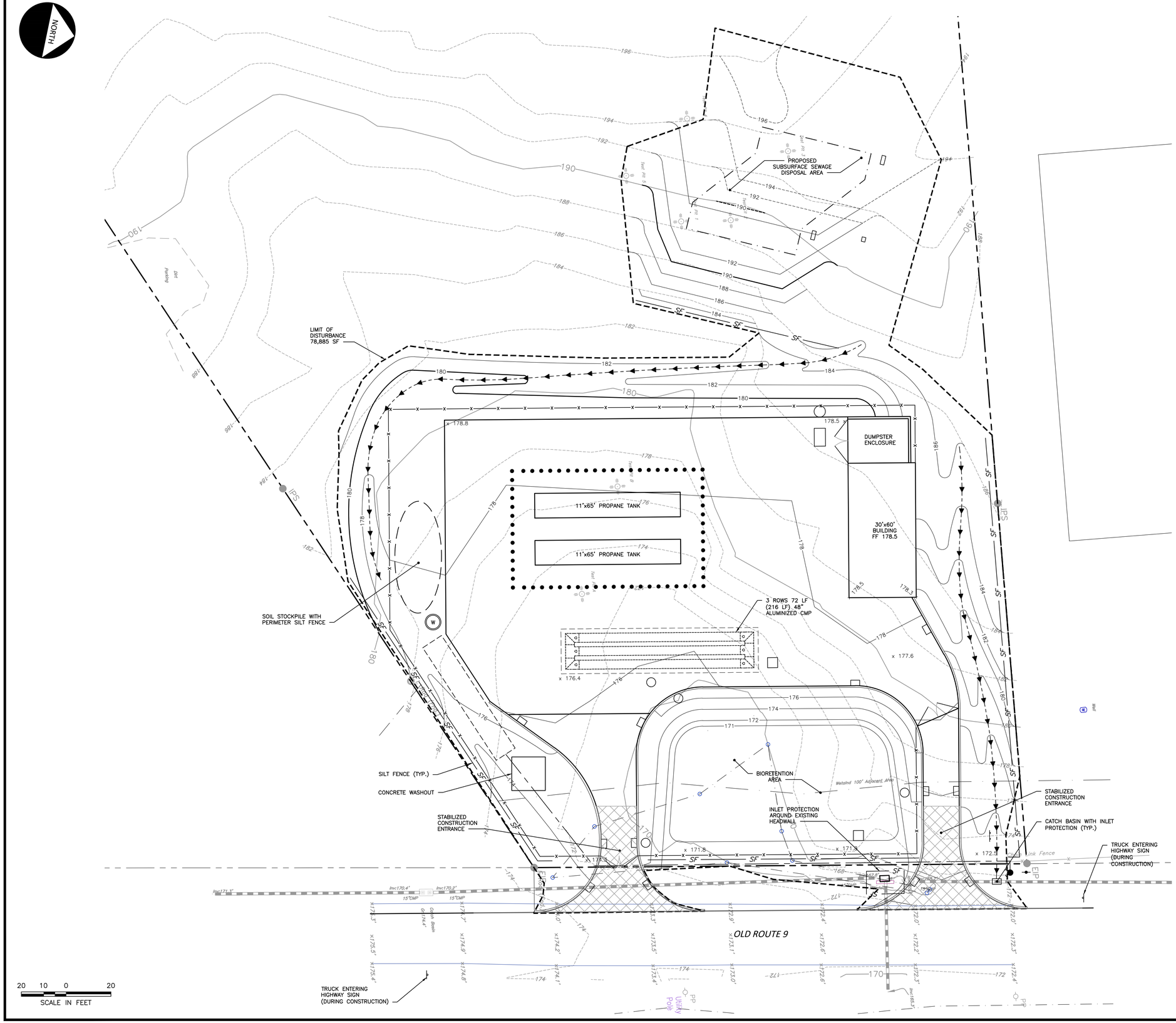

EROSION & SEDIMENT CONTROL NOTES

EROSION AND SEDIMENT CONTROL MEASURES

1. ALL EROSION AND SEDIMENT CONTROL MEASURES ARE TO BE IN STRICT COMPLIANCE WITH "NEW YORK" STATE STANDARDS AND SPECIFICATIONS FOR EROSION AND SEDIMENT CONTROL," NOVEMBER 2016.
2. DAMAGE TO SURFACE WATERS RESULTING FROM EROSION AND SEDIMENTATION SHALL BE MINIMIZED BY STABILIZING DISTURBED AREAS AND BY REMOVING SEDIMENT FROM CONSTRUCTION SITE DISCHARGES.
3. AS MUCH AS IS PRACTICAL, EXISTING VEGETATION SHALL BE PRESERVED. FOLLOWING THE COMPLETION OF CONSTRUCTION ACTIVITIES IN ANY PORTION OF THE SITE, PERMANENT VEGETATION SHALL BE ESTABLISHED ON ALL EXPOSED SOILS.
4. SITE PREPARATION ACTIVITIES SHALL BE PLANNED TO MINIMIZE THE SCOPE AND DURATION OF SOIL DISRUPTION.
5. PERMANENT TRAFFIC CORRIDORS SHALL BE ESTABLISHED AND "ROUTES OF CONVENIENCE" SHALL BE AVOIDED. STABILIZED CONSTRUCTION ENTRANCES SHALL BE INSTALLED AT ALL POINTS OF ENTRY ONTO THE PROJECT SITE.
6. SEEDED AREAS TO BE MULCHED WITH STRAW OR HAY MULCH IN ACCORDANCE WITH VEGETATIVE COVER SPECIFICATIONS.
7. THE CONTRACTOR IS RESPONSIBLE FOR THE INSTALLATION AND MAINTENANCE OF ALL EROSION AND SEDIMENT CONTROL MEASURES THROUGHOUT THE COURSE OF CONSTRUCTION.
8. THE CONTRACTOR IS RESPONSIBLE FOR CONTROLLING DUST BY SPRINKLING EXPOSED SOIL AREAS PERIODICALLY WITH WATER AS REQUIRED. THE CONTRACTOR TO SUPPLY ALL EQUIPMENT AND WATER.
9. WHEN ALL DISTURBED AREAS ARE STABLE, ALL TEMPORARY EROSION AND SEDIMENT CONTROL MEASURES SHALL BE REMOVED.

MAINTENANCE OF EROSION AND SEDIMENT CONTROL MEASURES

A. PERMANENT AND TEMPORARY VEGETATION:
INSPECT ALL AREAS THAT HAVE RECEIVED VEGETATION EVERY SEVEN DAYS. ALL AREAS DAMAGED BY EROSION OR WHERE SEED HAS NOT ESTABLISHED SHALL BE REPAIRED AND RESTABILIZED IMMEDIATELY.

B. STABILIZED CONSTRUCTION ENTRANCE:
INSPECT THE ENTRANCE PAD EVERY SEVEN DAYS. CHECK FOR MUD, SEDIMENT BUILD-UP AND PAD INTEGRITY. MAKE DAILY INSPECTIONS DURING WET WEATHER. RESHAPE PAD AS NEEDED FOR DRAINAGE AND RUNOFF CONTROL. WASH AND REPLACE STONE AS NEEDED. THE STONE IN THE ENTRANCE SHOULD BE WASHED OR REPLACED WHENEVER THE ENTRANCE FAILS TO REDUCE MUD BEING CARRIED OFF SITE BY VEHICLES. IMMEDIATELY REMOVE MUD AND SEDIMENT TRACKED OR WASHED ONTO PUBLIC ROADS BY BRUSHING OR SWEEPING. REMOVE TEMPORARY CONSTRUCTION ENTRANCE AS SOON AS THEY ARE NO LONGER NEEDED TO PROVIDE ACCESS TO THE SITE.

C. SILT FENCE:
INSPECT FOR DAMAGE EVERY SEVEN DAYS. MAKE ALL REPAIRS IMMEDIATELY. REMOVE SEDIMENT FROM THE UP-SLOPE FACE OF THE FENCE BEFORE IT ACCUMULATES TO A HEIGHT EQUAL TO 1/3 THE HEIGHT OF THE FENCE. IF FENCE FABRIC TEARS, BEGINS TO DECOMPOSE, OR IN ANY WAY BECOMES INEFFECTIVE, REPLACE THE AFFECTED SECTION OF FENCE IMMEDIATELY.

D. SOIL STOCKPILE:
INSPECT SEDIMENT CONTROL BARRIERS (SILT FENCE OR HAY BALE) AND VEGETATION FOR DAMAGE EVERY SEVEN DAYS. MAKE ALL REPAIRS IMMEDIATELY. REMOVE SEDIMENT FROM THE UP-SLOPE FACE OF THE SEDIMENT CONTROL BARRIER BEFORE IT ACCUMULATES TO A HEIGHT EQUAL TO 1 THE HEIGHT OF THE SEDIMENT CONTROL BARRIER. IF SEDIMENT CONTROL BARRIER TEARS, BEGINS TO DECOMPOSE, OR IN ANY WAY BECOMES INEFFECTIVE, REPLACE THE AFFECTED SECTION OF SEDIMENT CONTROL BARRIER IMMEDIATELY. REVEGETATE DISTURBED AREA TO STABILIZE SOIL STOCKPILE. REMOVE THE SEDIMENT CONTROL BARRIER WHEN THE SOIL STOCKPILE HAS BEEN REMOVED.

E. INLET PROTECTION:
INSPECT INLET PROTECTION FOR DAMAGE EVERY SEVEN DAYS. MAKE ALL REPAIRS IMMEDIATELY. REMOVE SEDIMENT AS NECESSARY TO PROVIDE FOR ADEQUATE STORAGE VOLUME FOR SUBSEQUENT RAINS.

F. DUST CONTROL:
SCHEDULE CONSTRUCTION OPERATIONS TO MINIMIZE THE AMOPUNT OF DISTURBED AREAS AT ANY ONE TIME DURING THE COURSE OF WORK. APPLY TEMPORARY SOIL STABILIZATION PRACTICES SUCH AS MULCHING, SEEDING, AND SPRAYING (WATER). STRUTURAL MEASURES (MULCH, SEEDING) SHALL BE INSTALLED IN DISTURBED AREAS BEFORE SIGNIFICANT BLOWING PROBLEMS DEVELOP. WATER SHALL BE SPRAYED AS NEEDED. REPEAT AS NEEDED, BUT AVOID EXCESSIVE SPRAYING, WHICH COULD CREATE RUNOFF AND EROSION PROBLEMS.

CONSTRUCTION SEQUENCING

1. ESTABLISH A TEMPORARY STABILIZED CONSTRUCTION ENTRANCE.
2. INSTALL SILT FENCE AS SHOWN ON THIS PLAN. INSTALL CONSTRUCTION FENCE TO PROTECT EXISTING FACILITIES AND OPERATIONS AS SHOWN ON THE PLANS AND/OR AS DIRECTED BY THE TOWN.
3. NOTIFY DESIGN ENGINEER FOR INSPECTION OF EROSION CONTROL MEASURES FOR APPROVAL BEFORE CONTINUING WITH EARTH DISTURBING ACTIVITIES.
4. CLEAR THE MINIMUM AMOUNT OF BRUSH AND TREES WITHIN THE DEVELOPMENT AREA THAT WILL ALLOW PERFORMANCE OF THE WORK.
5. CONSTRUCT TEMPORARY MATERIAL STORAGE AND STOCKPILE AREAS.
6. AS CONCRETE IS DELIVERED AND PLACED ON SITE, A CENTRALLY LOCATED CONCRETE WASHOUT AREA APPROXIMATELY 15-FEET SQUARE AND 2.5-DFEET DEEP SHALL BE PROVIDED. THIS WASHOUT AREA SHALL BE ENCLOSED BY SILT FENCE, LOCATED NECT TO A PAVED ROAD AND SITUATED A MINIMUM OF 50-FEET FROM A WATERCOURSE. IF REQUIRED, TEMPORARY DIVERSION DIKES SHALL BE INSTALLED AROUND WASHOUT AREA TO PREVENT STORMWATER FROM ENTERING WASHOUT LOCATION.
7. WASTE MATERIAL FROM CONCRETE WASHOUT OPERATIONS SHALL BE PERIODICALLY REMOVED AND LEGALLY DISPOSED OF WHEN TWO-THIRDS OF THE WASHOUT STORAGE AREA HAS ACCUMULATED WITH MATERIAL. AT THE END OF THE CONSTRUCTION, ALL MATERIAL FROM THE WASHOUT AREA SHALL BE REMOVED AND DISPOSED OF.
8. STABILIZE SOIL STOCKPILE AREA WITH SEED AND MULCH.
9. EXCAVATE BIORETENTION AREAS AS TEMPORARY SEDIMENT TRAPS AS NECESSARY; CLEAN OUT BASIN AREAS AND CONSTRUCT BIORETENTION AREAS AFTER TRIBUTARY AREAS ARE STABILIZED.
10. PERFORM REQUIRED GRADING AND EARTHWORK (CUT AND FILL) OPERATIONS INCLUDING STORMWATER MANAGEMENT BASIN.
11. PROTECT ALL CATCH BASINS WITHIN THE RAIN GARDEN AND BIORETENTION AREAS WITH INLET PROTECTION.
12. INSTALL UTILITIES, PAVING, SIDEWALKS AND OTHER SITE IMPROVEMENTS. DO NOT CONNECT NEW STORMWATER UTILITIES TO THE BIORETENTION AREA UNTIL TRIBUTARY AREAS ARE STABILIZED AND/OR INLETS ARE PROTECTED FROM SEDIMENTATION.
13. STABILIZED DISTURBED AREAS WITH SEED AND MULCH OUTSIDE AREAS TO RECEIVE PAVEMENT.
14. REMOVE SILT FENCE, TEMPORARY CONSTRUCTION ENTRANCE AND INLET PROTECTION WHEN A STABILIZING PERMANENT STAND OF VEGETATION IS ACHIEVED.

REVISIONS	BY
01/04/2021	1
02/15/2021	2
03/24/2021	3

ALFRED A. CAPPELLI Jr., AIA
ARCHITECT
1136 ROUTE 9 WAPPINGERS FALLS, N.Y. 12590
Phone: (845) 632-6500
acappe2102@aol.com

PROPOSED LIQUID PROPANE STORAGE FACILITY
DOWNEY ENERGY
199 OLD ROUTE 9 TOWN OF WAPPINGERR. N.Y.

EROSION CONTROL PLAN

DATE	11/30/2020
SCALE	1" = 20'
DRAWN	SW JR
JOB	19-013
SHEET	S-5

File: D:\MDU CAD\2020-09-10 DOWNEY\DOWNEY-S-05-EROSION CONTROL PLAN.dwg Layout: SHEET S-5 User: SAMWAZENEGGER Mar 25, 2021 - 8:26pm

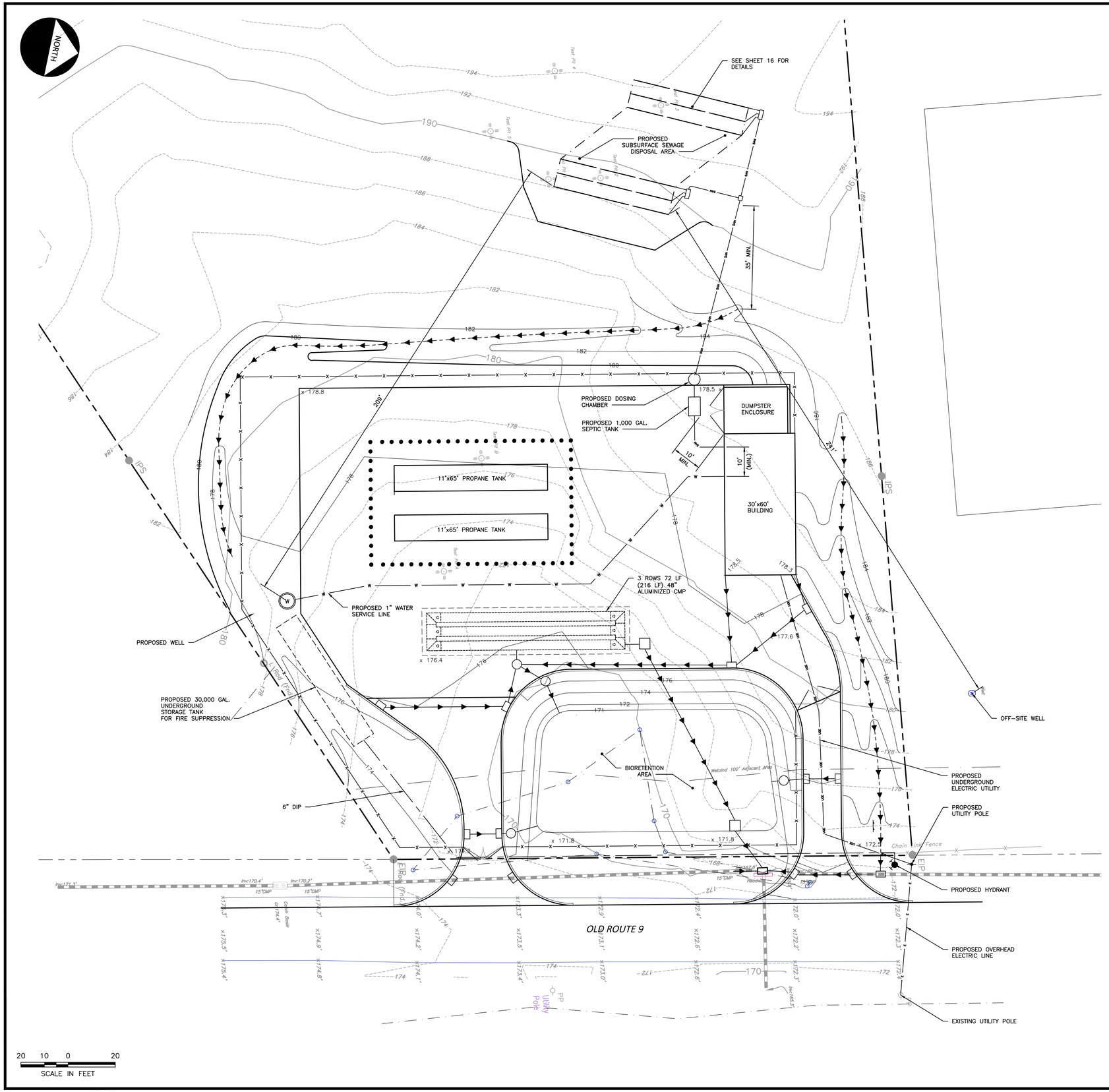

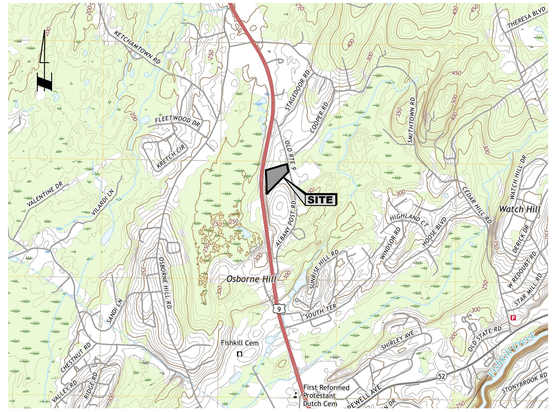

SITE LOCATION MAP

SOURCE: HOPEWELL JUNCTION USGS
QUAD SCALE: 1" = 2000'

1 OF 4 DCEHS APPROVAL

REVISIONS	BY
01/04/2021	1
02/15/2021	2
02/25/2021	3

ALFRED A. CAPPELLI Jr., AIA
ARCHITECT
1136 ROUTE 9 WAPPINGERS FALLS, N.Y. 12590
Phone: (845) 632-6500 acappe2102@aol.com

PROPOSED LIQUID PROPANE STORAGE FACILITY
DOWNEY ENERGY
199 OLD ROUTE 9 TOWN OF WAPPINGERR. N.Y.

UTILITY PLAN

DATE	11/30/2020
SCALE	1" = 20'
DRAWN	SW JR
JOB	19-013
SHEET	S-6

File: D:\WOJ CAD\2020-09-10 DOWNEY\DOWNEY-S-06-UTILITY PLAN.dwg Layout: SHEET S-6 User: SAM.WAIZENEGGER Mar 25, 2021 - 8:27pm

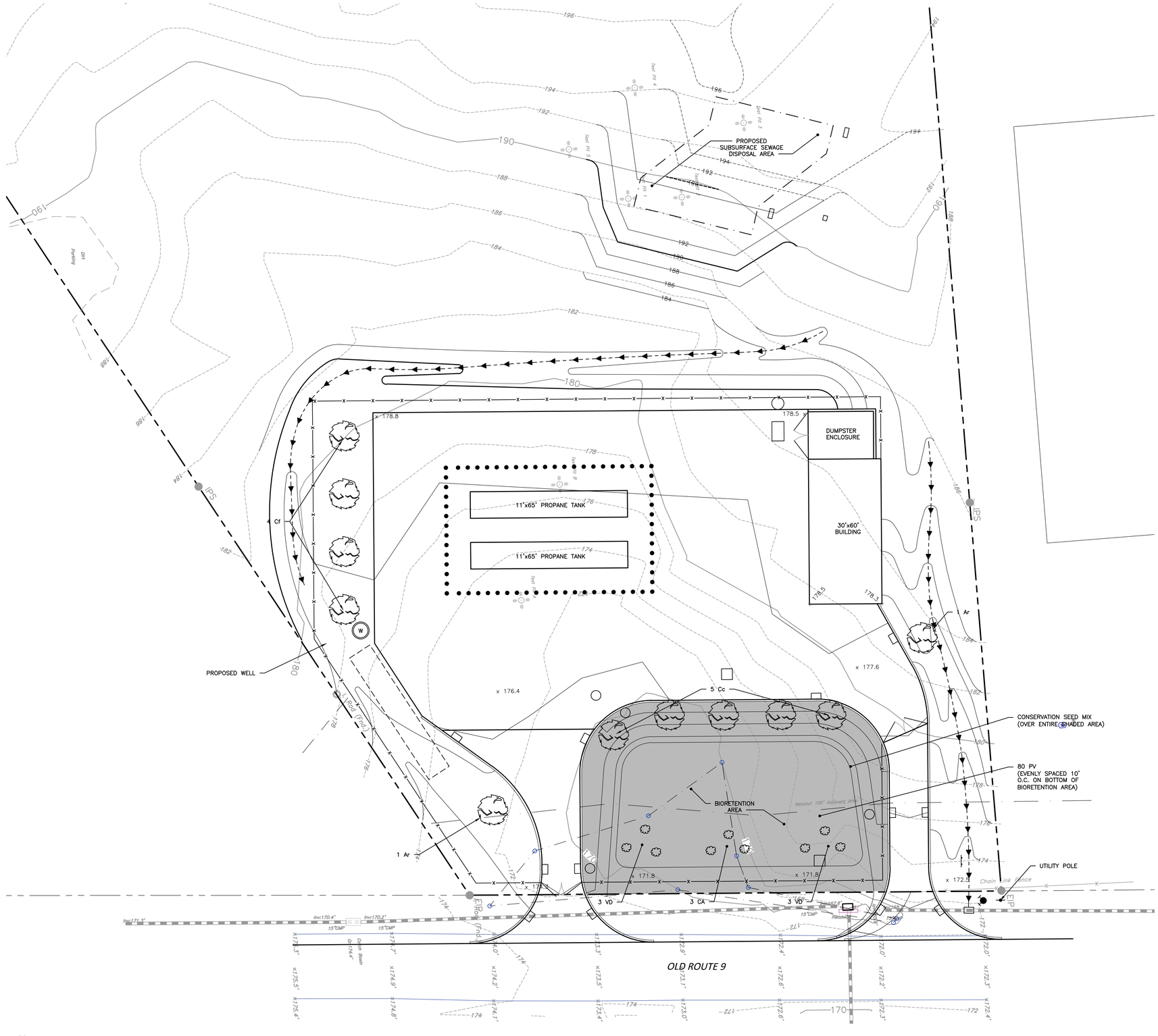

LANDSCAPING NOTES

1. THE WORK OF FURNISHING AND PLANTING TREES, SHRUBS AND VINES AS SHOWN ON THE PLANS AND AS APPROVED BY THE PLANNING BOARD WILL BE ACCOMPLISHED IN ACCORDANCE WITH ACCEPTED, ESTABLISHED HORTICULTURAL PRACTICES. ANY CHANGE IN PLANT TYPE, ETC., OR LOCATION REQUIRES THE WRITTEN APPROVAL OF THE PLANNING BOARD.
2. PLANTS: COMMON AND SCIENTIFIC NAMES OF PLANTS SHALL BE IN CONFORMITY WITH SPN (STANDARDIZED PLANT NAMES). PLANTS INCLUDING ROOT SPREAD AND BALL SIZE SHALL BE IN ACCORDANCE WITH THE CURRENT EDITION OF "AMERICAN STANDARD FOR NURSERY STOCK".
3. PLANTS SHALL HAVEA NORMAL HABIT OF GROWTH AND BE TYPICALLY CHARACTERISTIC OF THEIR RESPECTIVE KINDS.
4. PLANTS SHALL BE FREE FROM INJURY, INSECT DAMAGE, AND DISEASE.
5. CONTAINER GROWTH PLANTS SHALL HAVE BEEN GROWN LONG ENOUGH FOR NEW FIBROUS ROOTS TO HAVE DEVELOPED. SHRUBS AND VINES SHALL HAVE GOOD FIBROUS ROOT SYSTEMS.
6. NO PLANTING WILL BE DONE WHEN THERE ARE UNSATISFACTORY CONDITIONS AS DETERMINED BY THE ARCHITECT.
7. ROCK OR OTHER UNDERGROUND OBSTRUCTIONS SHALL BE REMOVED TO A DEPTH AS DIRECTED BY THE ARCHITECT.
8. ALL PLANTS SHALL BE PROTECTED FROM DRYING OUT.
9. LOCATIONS OF PLANTINGS SHALL BE MARKED OUT ON THE GROUND BY THE CONTRACTOR TO THE SATISFACTION OF THE ARCHITECT.
10. ALL PLANTS SHALL BE SET IN ACCORDANCE WITH GOOD ESTABLISHED HORTICULTURAL PRACTICE.
11. ALL PLANTS SHALL BE PLUMB AT SUCH A LEVEL THAT AFTER SETTLEMENT THEY BEAR THE SAME RELATIONSHIP TO THE LEVEL OF THE SURROUNDING GROUND AS THE BORE TO THE GROUND FROM WHICH THEY WERE DUG UNLESS OTHERWISE DIRECTED BY THE ARCHITECT.
12. BACKFILL SHALL BE THOROUGHLY SETTLED BY TAMPING. BACKFILL IS TO BE PLACED INTO PLANT PITS IN LAYERS NOT TO EXCEED 4" AND TAMPED.
13. THOROUGH WATERING SHOULD ACCOMPANY BACKFILL UNLESS OTHERWISE DIRECTED BY THE ARCHITECT. A SAUCER CAPABLE OF HOLDING WATER TO A DEPTH AS SHOWN ON THE PLANS SHALL BE FORMED ABOUT EACH PLANT PIT. ALL PLANTS SHALL BE WATERED TO PROVIDE NOT LESS THAN FIVE GALLONS OF WATER PER SQUARE YARD OF PLANT PIT OR BED AREAS.
14. ALL CLOTH ROPES, ETC. SHALL BE REMOVED FROM THE TOPS OF BALLS, BUT NOT PULLED OUT FROM UNDER BALLS.
15. ALL TRUNKS OF DECIDUOUS TREES SHALL BE WRAPPED WITH A MATERIAL AS APPROVED BY THE ARCHITECT IMMEDIATELY AFTER PLANTING.
16. ALL TREES SHALL BE FIRMLY GUYED, STAKED, OR ANCHORED UNLESS OTHERWISE APPROVED.
17. PRUNING SHALL BE DONE IN ACCORDANCE WITH ACCEPTED GOOD HORTICULTURAL PRACTICE AS DIRECTED BY THE ARCHITECT.
18. MULCHING SHALL COVER THE PLANT PIT OR PLANTING BED TO A DEPTH AS SPECIFIED ON THE PLANS.
19. THE AREA DISTURBED BY THE PLANTING OPERATION SHALL BE RESTORED TO AN ORDERLY CONDITION AS APPROVED BY THE ARCHITECT.
20. ANTI-DESICCANTS SHALL BE APPLIED TO ALL PLANTINGS ACCORDING TO THE MANUFACTURERS DIRECTIONS. THIS MATERIAL SHALL BE APPLIED TO EVERGREENS WITHIN TWO WEEKS OF PLANTING AND TO DECIDUOUS PLANTINGS PLACED IN THE FALL WHEN AIR TEMPERATURE IS ABOVE 40 DEGREES FAHRENHEIT OR IN THE SPRING WHEN LEAVES HAVE REACHED 75% OF MATURE SIZE.
21. ALL DEAD, UNHEALTHY OR BADLY IMPAIRED PLANTS, AS DETERMINED BY THE ARCHITECT, SHALL BE PROMPTLY REMOVED FROM THE PROJECT.
22. IN THE EVENT OF THE THREAT OF SERIOUS DAMAGE FROM INSECTS, DISEASE OR RODENTS, THE PLANTS WILL BE TREATED IN ACCORDANCE WITH GOOD HORTICULTURAL PRACTICE AS APPROVED BY THE ARCHITECT.
23. ALL VEGETATION SHOWN ON THIS PLAN SHALL BE MAINTAINED IN A HEALTHY AND VIGOROUS GROWING CONDITION THROUGHOUT THE DURATION OF THE PROPOSED USE. ALL VEGETATION NOT SO MAINTAINED SHALL BE REPLACED WITH NEW COMPARABLE VEGETATION AT THE BEGINNING OF THE NEW GROWING SEASON.
24. ALL PLANTED AREAS WHERE TREES AND/OR SHRUBS ARE INDICATED, TO HAVE BEDS OF WHITEWASHED STONE OR PINE BARK CHIPS AS NOTED ON PLANS.
25. ALL REMAINING AND DISTURBED AREAS NOT PAVED OR BEING PLANTED WITH TREES OR SHRUBS SHALL BE SEEDED AND MULCHED.
26. CONTRACTOR TO BE RESPONSIBLE FOR BRINGING TOPSOIL TO SITE AS NECESSARY FOR PROPER SEEDING AND PLANTING.
27. ALL PLANTING SHALL BE GUARANTEED BY CONTRACTOR A MINIMUM OF ONE YEAR AND BE REPLACED AS NECESSARY.
28. FERTILIZE AND/OR FEED ALL PLANTINGS AS RECOMMENDED.
29. AFTER SEEDING GERMINATES, CONTRACTOR TO BE RESPONSIBLE FOR RAKING, MULCHING, RE-SEEDING AS NECESSARY AND CUTTING AND MAINTAINING LAWN FOR A PERIOD OF ONE MONTH AFTER GERMINATION AND TO ARCHITECT'S SATISFACTION.

PLANTING SCHEDULE

MARK	QUANTITY	BOTANICAL NAME	COMMON NAME	SIZE
Ar	2	ACER RUBRUM	RED MAPLE	2 ½"–3"C
Cf	4	CORNUS FLORIDA	FLOWERING DOGWOOD	2 ½"
Cc	5	CERCIC CANADENSIS	ROSEBUD	2 ½"

1. THE DWARF ENGLISH BOXWOOD AND BELLA BELLISIMA TO BE KEPT AT A HEIGHT OF NO GREATER THAN 30" ABOVE FINISHED GRADE AND SHOULD BE TRIMMED REGULARLY.

BIORETENTION AREA SCHEDULE

MARK	QUANTITY	BOTANICAL NAME	COMMON NAME	SIZE	SIZE
CA	3	CORANUS AMOMIUM	SILKY DOGWOOD	10 FT (MIN)	#5 POT
PV	80	PANICUM VIRGATUM	SWITCHGRASS	18 IN (MIN)	#3 POT
VD	6	VIRURNUM DENTATUM	ARROWWOOD VIBURNUM	10 FT (MIN)	#10 POT

1. CONSERVATION MIX SHALL BE NEW ENGLAND CONSERVATION/WILDLIFE MIX BY NEW ENGLAND WETLAND PLANTS, INC. (WWW.NEWP.COM).
2. SWITCH GRASS SHALL BE SPACED 10' O.C. OVER THE ENTIRE BOTTOM OF THE BIORETENTION AREA (170 CONTOUR).

REVISIONS	BY
01/04/2021	1
02/15/2021	2
03/24/2021	3

ALFRED A. CAPPELLI Jr., AIA
ARCHITECT
1136 ROUTE 9 WAPPINGERS FALLS, N.Y. 12590
Phone: (845) 632-6500
acappe2102@aol.com

PROPOSED LIQUID PROPANE STORAGE FACILITY
DOWNEY ENERGY
199 OLD ROUTE 9 TOWN OF WAPPINGERR. N.Y.

LANSCAPING PLAN & NOTES

DATE	11/30/2020
SCALE	1" = 20'
DRAWN	SW JR
JOB	19-013
SHEET	S-7

File: D:\WKU CAD\2020-09-10 DOWNEY\DOWNEY-S-07-LANDSCAPING PLAN.dwg Layout: SHEET S-7 User: SAMWAZENEGGER Mar 25, 2021 - 8:27pm

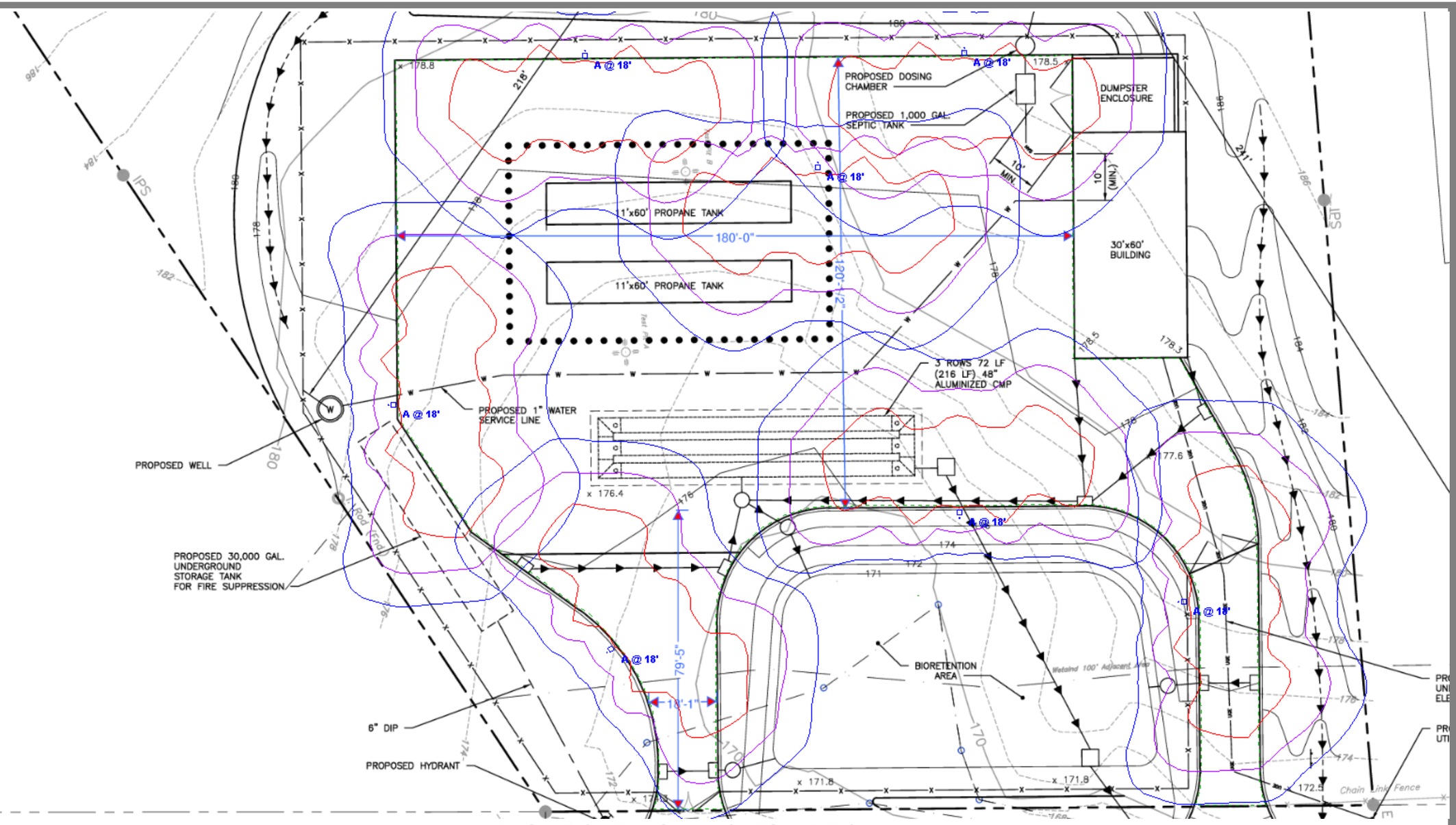

Red = 2 fc, Purple = 1 fc, Blue 0.5 fc

Statistics

Description	Symbol	Avg	Min	Avg/Min
Calc Zone #2	+	2.00 fc	0.51 fc	3.9:1

Schedule

Symbol	Label	Quantity	Manufacturer	Catalog Number	Description	Lamp	Number Lamps	Filename	Lumens Per Lamp	Light Loss Factor	Wattage
	A	7	KIM LIGHTING Educational, Government, Healthcare, Hospitality, Hotel, Industrial, Institutional, Manufacturing, Pathway, Prison, Roadway, Site, Sports, Street, Direct, Wet Location	WP9S3P70-60L3K	WARP9 LED PICO-PRISM	C-70-CRI DATA SHOWN IS ABSOLUTE.	1	WP9S3P70-60L3K.ies	13429	0.85	130.6

VISUAL

Photometric Analysis

Designer	
Date	02/17/2021
Scale	Not to Scale
Drawing No.	
Summary	

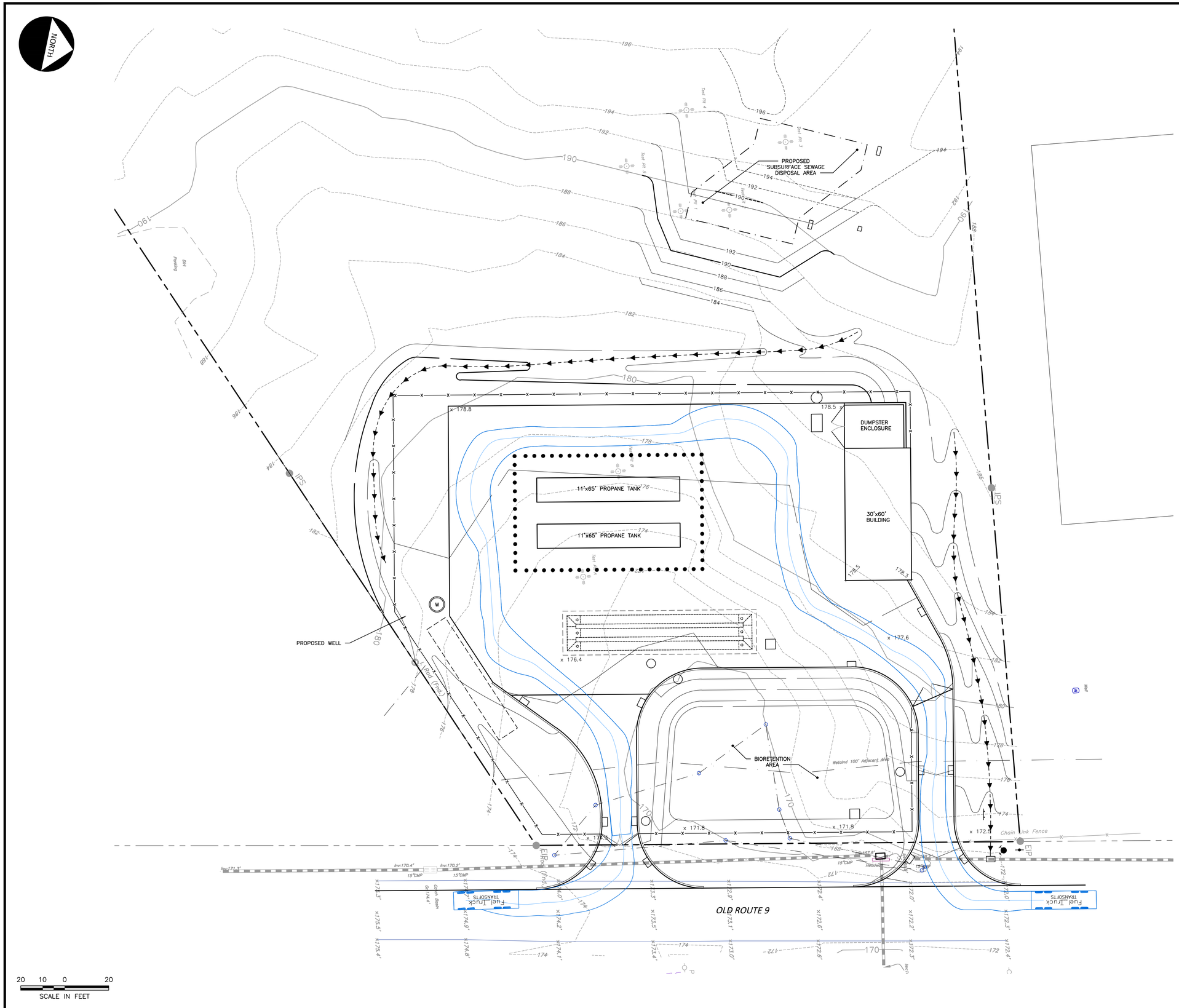

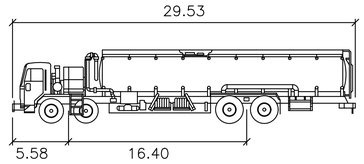

Fuel Truck

	feet
Width	: 8.20
Track	: 8.20
Lock To Lock Time	: 6.0
Steering Angle	: 39.5

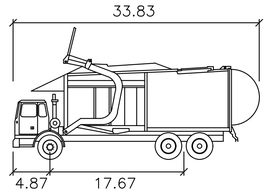

Wayne Titan

	feet
Width	: 8.46
Track	: 8.00
Lock to Lock Time	: 6.0
Steering Angle	: 45.0

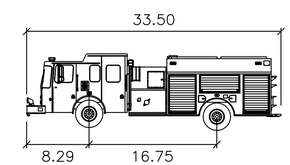

Smeal Pumper CAFS

	feet
Width	: 8.17
Track	: 7.94
Lock to Lock Time	: 6.0
Steering Angle	: 45.0

REVISIONS	BY
01/04/2021	1
02/15/2021	2
03/24/2021	3

ALFRED A. CAPPELLI Jr., AIA
ARCHITECT
1136 ROUTE 9 WAPPINGERS FALLS, N.Y. 12590
Phone: (845) 632-6500 acappe2102@aol.com

PROPOSED LIQUID PROPANE STORAGE FACILITY
DOWNEY ENERGY
199 OLD ROUTE 9 TOWN OF WAPPINGERR. N.Y.

VEHICLE MOVEMENT PLAN

DATE	11/30/2020
SCALE	1" = 20'
DRAWN	SW JR
JOB	19-013
SHEET	S-9

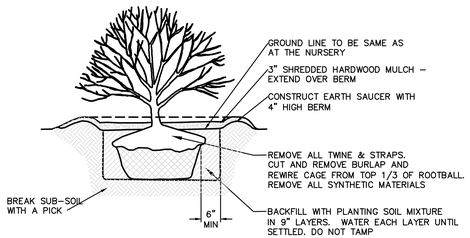

NOTE:
SPRAY WITH ANTIDESICCANT IN ACCORDANCE WITH MFG.'S RECOMMENDATIONS IF FOLIAGE IS PRESENT.

1 SHRUB PLANTING DETAIL FOR ALL SHRUBS BALLED & BURLAPPED
NOT TO SCALE

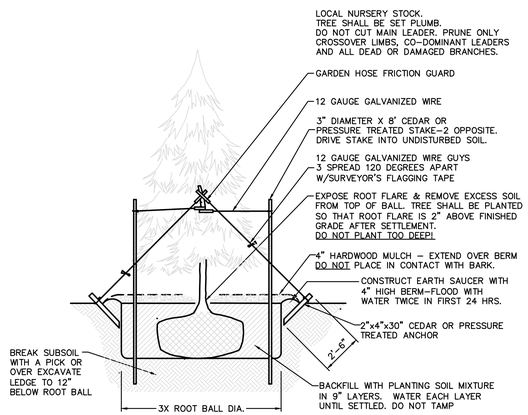

NOTES:
1. SPRAY WITH ANTIDESICCANT IN ACCORDANCE WITH MFG.'S RECOMMENDATIONS.
2. TREES LESS THAN 8' HEIGHT SHALL BE STAKED.
3. TREES GREATER THAN 8' HEIGHT SHALL BE GUYED AND ANCHORED.
4. STAKES SHALL BE REMOVED AT THE END OF THE FIRST GROWING SEASON AFTER PLANTING.

2 EVERGREEN TREE PLANTING
NOT TO SCALE

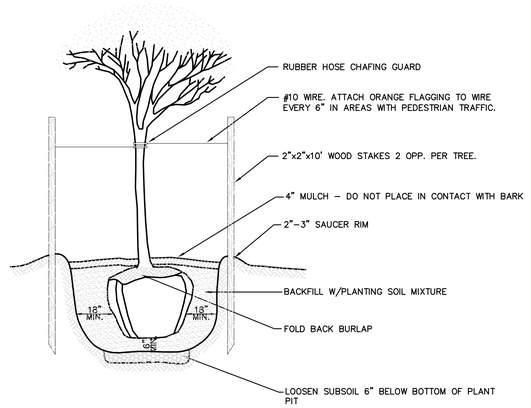

3 DECIDUOUS TREE
NOT TO SCALE

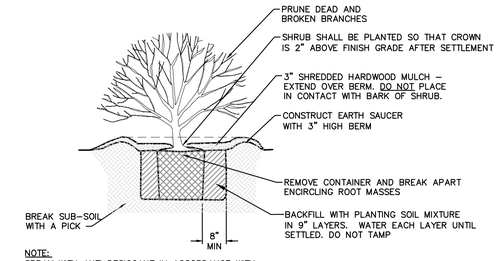

NOTE:
SPRAY WITH ANTI DESICCANT IN ACCORDANCE WITH MFG.'S RECOMMENDATIONS IF FOLIAGE IS PRESENT.

FOR CONTAINER GROWN SHRUBS, USE FINGERS OR SMALL HAND TOOLS TO PULL THE ROOTS OUT OF THE OUTER LAYER OF POTTING SOIL; THEN CUT OR PULL APART ANY ROOTS CIRCLING THE PERIMETER OF THE CONTAINER.

INCORPORATE COMMERCIALLY PREPARED MYCORRHIZA SPORES IN THE SOIL IMMEDIATELY AROUND THE ROOT BALL AT RATES SPECIFIED BY THE MANUFACTURER.

4 SHRUB PLANTING DETAIL FOR CONTAINERIZED SHRUBS
NOT TO SCALE

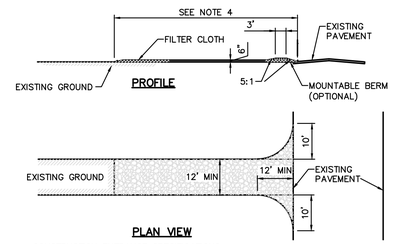

CONSTRUCTION ENTRANCE SPECIFICATIONS:
1. STONE SIZE – USE 2" STONE, OR RECLAIMED OR RECYCLED CONCRETE EQUIVALENT.
2. THICKNESS – NOT LESS THAN SIX (6) INCHES.
3. WIDTH – TWELVE (12) FOOT MINIMUM, BUT NOT LESS THAN THE FULL WIDTH AT POINTS WHERE INGRESS OR EGRESS OCCURS. TWENTY FOUR FEET (24) FOOT IF SINGLE ENTRANCE TO SITE.
4. LENGTH – NOT LESS THAN 50' (EXCEPT ON A SINGLE RESIDENCE LOT WHERE A 30' MINIMUM LENGTH WOULD APPLY).
5. FILTER CLOTH – WILL BE PLACED OVER THE ENTIRE AREA PRIOR TO PLACING OF STONE.
6. SURFACE WATER – ALL SURFACE WATER FLOWING OR DIVERTED TOWARD CONSTRUCTION ENTRANCES SHALL BE PIPED ACROSS THE ENTRANCE. IF PIPING IS IMPRACTICAL, A MOUNTABLE BERM WITH 5:1 SLOPES WILL BE PERMITTED.
7. MAINTENANCE – THE ENTRANCE SHALL BE MAINTAINED IN A CONDITION WHICH WILL PREVENT TRACKING OR FLOWING OF SEDIMENT ONTO PUBLIC RIGHTS-OF-WAY. THIS MAY REQUIRE PERIODIC TOP DRESSING WITH ADDITIONAL STONE AS CONDITIONS DEMAND AND REPAIR AND/OR CLEANOUT OF ANY MEASURES USED TO TRAP SEDIMENT. ALL SEDIMENT SPILLED, DROPPED, WASHED OR TRACKED ONTO PUBLIC RIGHTS-OF-WAY MUST BE REMOVED IMMEDIATELY.
8. WASHING – WHEELS SHALL BE CLEANED TO REMOVE SEDIMENT PRIOR TO ENTRANCE ONTO PUBLIC RIGHTS-OF-WAY. WHEN WASHING IS REQUIRED, IT SHALL BE DONE ON AN AREA STABILIZED WITH STONE AND WHICH DRAINS INTO AN APPROVED SEDIMENT TRAPPING DEVICE.
9. PERIODIC INSPECTION AND NEEDED MAINTENANCE SHALL BE PROVIDED AFTER EACH RAIN.

5 STABILIZED CONSTRUCTION ENTRANCE
NOT TO SCALE

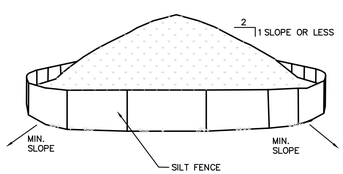

NOTES:
1. AREA CHOSEN FOR STOCKPILING OPERATIONS SHALL BE DRY AND STABLE.
2. MAXIMUM SLOPE OF STOCKPILE SHALL BE 1V:2H.
3. UPON COMPLETION OF SOIL STOCKPILING, EACH PILE SHALL BE SURROUNDED WITH SILT FENCING, THEN STABILIZED WITH VEGETATION OR COVERED.
4. SEE SPECIFICATIONS FOR INSTALLATION OF SILT FENCE.
5. HAYBALES TO BE USED WHERE STOCKPILES ARE LOCATED ON PAVED AREAS.

6 TEMPORARY SOIL STOCKPILE
NOT TO SCALE

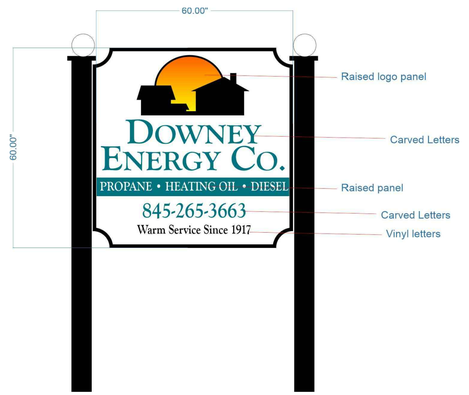

7 ENTRANCE SIGN
NOT TO SCALE

REVISIONS	BY
01/04/2021	1
02/15/2021	2
03/24/2021	3

ALFRED A. CAPPELLI Jr., AIA
ARCHITECT
1136 ROUTE 9 WAPPINGERS FALLS, N.Y. 12590
Phone: (845) 632-6500
acappe2102@aol.com

PROPOSED LIQUID PROPANE STORAGE FACILITY
DOWNEY ENERGY
199 OLD ROUTE 9 TOWN OF WAPPINGERR. N.Y.

SITE DETAILS

DATE	11/30/2020
SCALE	AS SHOWN
DRAWN	SW JR
JOB	19-013
SHEET	S-10

File: D:\MJU CAD\2020-09-10 DOWNEY\DOWNEY-S-10-SITE DETAILS.dwg Layout: SHEET S-10 User: SAMWAINEGEGER Mar 23, 2021 - 7:07pm

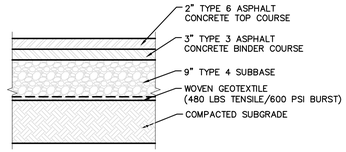

NOTES:

1. MATERIALS AND METHODS OF CONSTRUCTION SHALL BE IN CONFORMANCE WITH THE NEW YORK STATE DEPARTMENT OF TRANSPORTATION (NYSDOT) STANDARD SPECIFICATIONS FOR CONSTRUCTION AND MATERIALS, DATED JANUARY 2, 2008, AND ALL ADDENDA THERETO; THE ONLY EXCEPTION BEING THAT THE WORK OF THIS CONTRACT SHALL BE MEASURED IN ENGLISH UNITS.
2. SUBBASE MATERIAL SHALL CONFORM WITH SECTION 304 – SUBBASE COURSE OF THE ABOVE REFERENCED NYSDOT STANDARD SPECIFICATIONS AND THE TYPE CALLED OUT IN THESE DRAWINGS.
3. TACK COAT WHEN SPECIFIED OR CALLED OUT IN THESE DRAWINGS OR REQUIRED BY THE REFERENCED SPECIFICATIONS SHALL CONFORM WITH SECTION 407–TACK COAT OF THE ABOVE REFERENCED NYSDOT STANDARD SPECIFICATIONS.
4. WHERE IT IS NECESSARY TO PLACE FILL FOR PURPOSES OF BRINGING THE SUBGRADE ELEVATION UP TO A SPECIFIED GRADE, THE FILL MATERIAL PLACED SHALL BE IN CONFORMANCE WITH SECTION 203–EXCAVATION AND EMBANKMENT OF THE ABOVE REFERENCED NYSDOT STANDARD SPECIFICATIONS

1 ASPHALT PAVEMENT SECTION
NOT TO SCALE

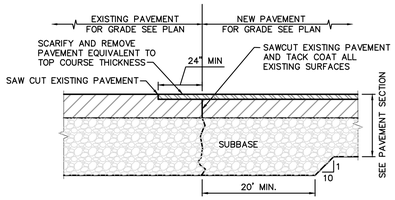

2 PAVEMENT TRANSITION (SAWCUT)
NOT TO SCALE

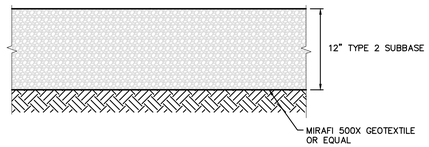

3 GRAVEL PAVING
NOT TO SCALE

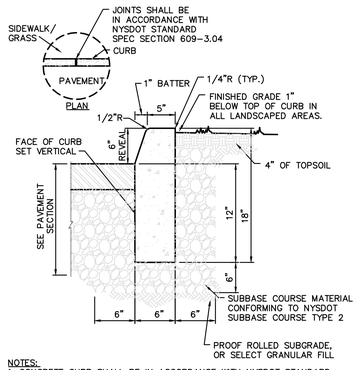

NOTES:

1. CONCRETE CURB SHALL BE IN ACCORDANCE WITH NYSDOT STANDARD SPECIFICATION SECTION 609.
2. PRECAST CONCRETE CURB MAY BE SUBSTITUTED WHEN ALTERNATE CONSTRUCTION DETAILS ARE SUBMITTED BY THE CONTRACTOR AND APPROVED BY THE ENGINEER.

4 SITE CAST IN PLACE CONCRETE CURB
NOT TO SCALE

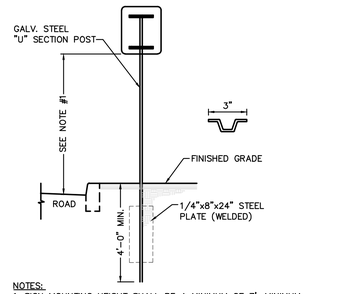

NOTES:

1. SIGN MOUNTING HEIGHT SHALL BE A MINIMUM OF 7'. MINIMUM MOUNTING HEIGHT MAY BE ADJUSTED ONLY IN ACCORDANCE WITH PROVISIONS OUTLINED IN "NYCRR, CHAPTER V–UNIFORM TRAFFIC CONTROL DEVICES."
2. SIGN POST SHALL BE IN ACCORDANCE W/ NYSDOT STANDARD SPECS SECTION 730.

5 SINGLE POST SIGN MOUNTING
NOT TO SCALE

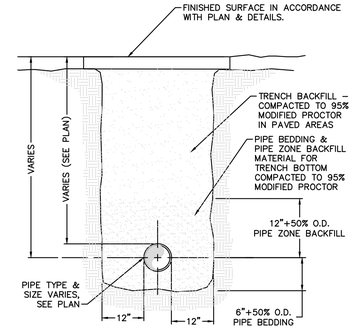

NOTES:

1. PIPE BEDDING & PIPE ZONE BACKFILL SHALL BE A NATURAL RUN–OF–BANK (R.O.B.) SAND OR A MIXTURE OF CRUSHED STONE AND GRAVEL, FREE OF SOFT, NONDURABLE PARTICLES, ORGANIC MATERIALS AND ELONGATED PARTICLES, AND SHALL BE WELL GRADED FROM FINE TO COARSE PARTICLES. BEDDING GRADATIONS SHALL BE APPROVED BY THE ENGINEER AND SHALL MEET THE FOLLOWING GRADATION REQUIREMENTS:

SIEVE DESIGNATION	% PASSING
3/4"	100%
NO. 40	0–70%
NO. 200	0–10%

2. TRENCH BACKFILL SHALL BE A NATURAL RUN–OF–BANK (R.O.B.) OR PROCESSED GRAVEL, OR EXCAVATED MATERIAL FREE OF SOFT, NONDURABLE PARTICLES, ORGANIC MATERIALS AND ELONGATED PARTICLES, AND SHALL BE WELL GRADED FROM FINE TO COARSE PARTICLES. TRENCH BACKFILL GRADATIONS SHALL BE APPROVED BY THE ENGINEER AND SHALL MEET THE FOLLOWING GRADATION REQUIREMENTS:

SIEVE DESIGNATION	% PASSING
2"	100%
1"	
1/4"	30–65%
NO. 40	5–40%
NO. 200	0–15%

3. INSTALL CONTINUOUS DETECTABLE MARKING TAPE DURING BACKFILLING OF TRENCH FOR UNDERGROUND PIPING. LOCATE TAPE 12" BELOW FINISHED GRADE, DIRECTLY OVER PIPING, EXCEPT 6" BELOW SUBGRADE UNDER PAVEMENTS & SLAB.
4. TRENCHING SHALL BE IMPLEMENTED IN ACCORDANCE WITH O.S.H.A. STANDARDS.

6 STORM PIPE TRENCH
NOT TO SCALE

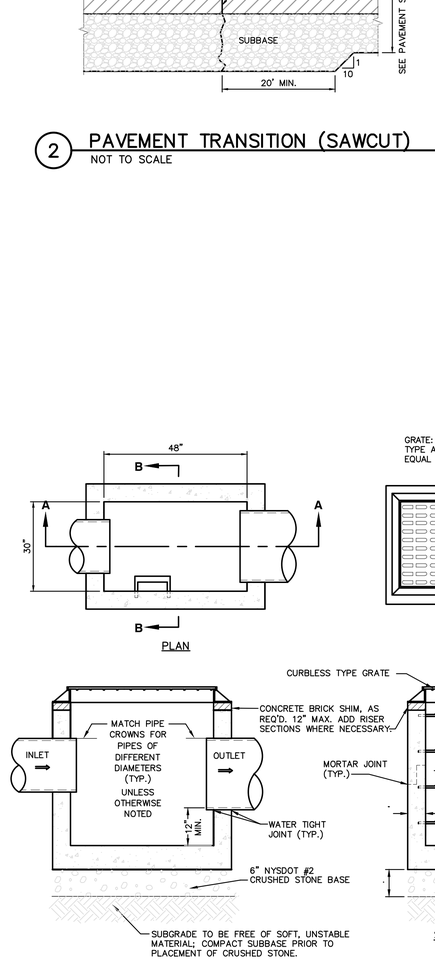

NOTES:

1. PRECAST CONCRETE CATCH BASIN SECTIONS AS MANUFACTURED BY WOODWARD'S CONCRETE OR APPROVED EQUAL
2. CATCH BASIN SHALL BE PRECAST CONCRETE. DESIGNED FOR H20 VEHICULAR LOADING AND 25% IMPACT.
3. FRAME AND COVER SHALL BE DESIGNED FOR H20 VEHICULAR LOADING & 25% IMPACT.
4. CONCRETE CATCH BASIN CASTING CLEAR OPENING DIMENSION MUST MATCH FRAME AND GRATE CLEAR OPENING DIMENSION.
5. CATCH BASINS HAVING A DEPTH GREATER THAN 48" FROM FINISHED SURFACE TO THE TOP OF THE CONCRETE BASE SHALL BE PROVIDED WITH STEPS.
6. BACKFILL USING TRENCH BACKFILL, COMPACTED IN 6" LIFTS.
7. SUMPS FOR CATCH BASINS SHALL BE 12" OR AS OTHERWISE NOTED.
8. INSTALL CATCH BASINS ON EXISTING STORM PIPES WITHIN THE ROW PER TOWN REQUIREMENTS.
9. FOR INSTALLATION OF EXISTING PIPES, CUT THE PIPE TO ALLOW INSTALLATION. SLIDE ONE END OF CATCH BASIN ONTO PIPE AND INSTALL AN EXTENSION TO THE OPPOSITE SIDE PIPE WITH A COUPLING APPROVED FOR THE PIPE MATERIAL. MORTAR ALL PIPES WITHIN THE STRUCTURE OPENINGS.

7 PRECAST CONCRETE CATCH BASIN
NOT TO SCALE

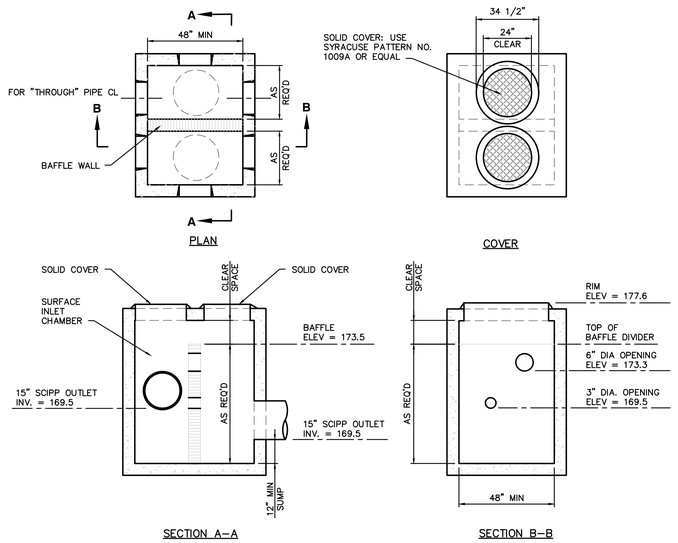

NOTES:

1. PIPE PENETRATIONS SHALL BE AS SHOWN ON THE UTILITY PLAN.

8 DETENTION SYSTEM OUTLET STRUCTURE
NOT TO SCALE

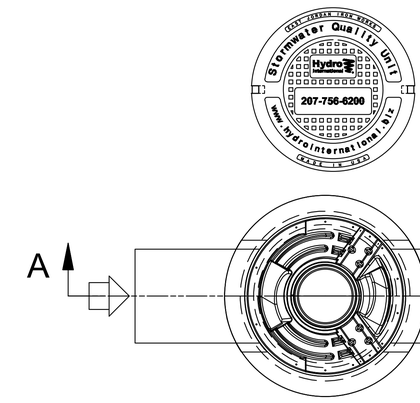

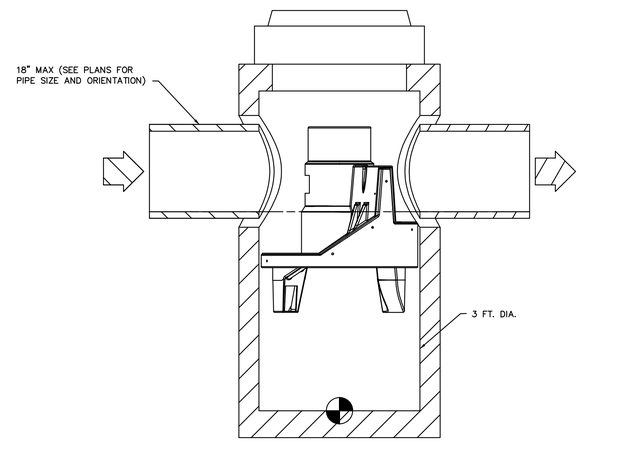

NOTES:

1. UNIT SHALL BE FIRST DEFENCE MODEL FD–3HC BY HYDRO INTERNATIONAL, HYDRO–INT.COM.

9 PRE–TREATMENT CHAMBER
NOT TO SCALE

REVISIONS	BY
01/04/2021	1
02/15/2021	2
03/24/2021	3

ALFRED A. CAPPELLI Jr., AIA
ARCHITECT
1136 ROUTE 9 WAPPINGERS FALLS, N.Y. 12590
Phone: (845) 632-6500
acappe2102@aol.com

PROPOSED LIQUID PROPANE STORAGE FACILITY
DOWNEY ENERGY
199 OLD ROUTE 9 TOWN OF WAPPINGERR. N.Y.

SITE DETAILS

DATE	11/30/2020
SCALE	AS SHOWN
DRAWN	SW JR
JOB	19-013
SHEET	S-11

File: D:\WJU CAD\2020-09-10 DOWNEY\DOWNEY-S-10-SITE DETAILS.dwg Layout: SHEET S-11 User: SAMMANZIEGGER Mar 23, 2021 - 7:06pm

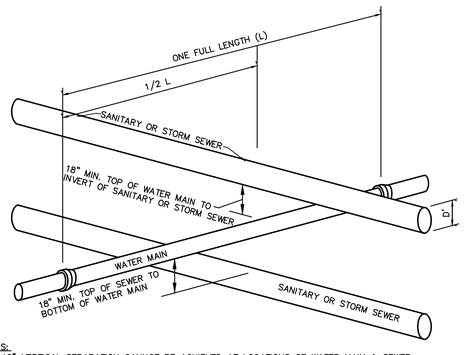

NOTES:
1. IF 18" VERTICAL SEPARATION CANNOT BE ACHIEVED AT LOCATIONS OF WATER MAIN & SEWER CROSSINGS, CONTRACTOR SHALL CONSTRUCT EITHER OF THE FOLLOWING OPTIONS:
   A. CONSTRUCT SEWER OF PVC PRESSURE PIPE MATERIAL 10' ON EACH SIDE OF THE WATER MAIN/SEWER.
   B. ENCASE SEWER PIPE IN CONCRETE, 4' DISTANCE ON EACH SIDE OF WATER MAIN/SEWER CROSSING. CONCRETE ENCASEMENT SHALL BE MINIMUM 6" ALL AROUND PROPOSED SEWER PIPE.
1. IF 10' HORIZONTAL SEPARATION CANNOT BE ACHIEVED AT LOCATIONS OF WATER MAIN & SEWER CROSSINGS, THE CONTRACTOR SHALL CONSTRUCT EITHER OF THE FOLLOWING OPTIONS:
   A. THE WATER MAIN SHALL BE RELOCATED TO PROVIDE THE 10' HORIZONTAL SEPARATION OR RECONSTRUCTED WITH MECHANICAL JOINT PIPE FOR A DISTANCE OF TEN (10) FEET ON EACH SIDE OF THE SEWER. ONE FULL LENGTH OF WATER MAIN SHALL BE CENTERED OVER THE SEWER SO THAT BOTH JOINTS WILL BE AS FAR AWAY FROM THE SEWER AS POSSIBLE (REFER TO THE WATER LINE OFFSET DETAIL ON SHEET C-530).
   B. BOTH THE WATER MAIN AND SEWER MAIN SHALL BE CONSTRUCTED OF MECHANICAL JOINT CAST IRON PIPE AND SHALL BE PRESSURE TESTED TO ASSURE WATER TIGHTNESS, OR ENCASED IN CONCRETE IN ACCORDANCE WITH THE NYS HEALTH DEPARTMENT REQUIREMENTS.

1 WATER/SEWER SEPARATION REQUIREMENTS
NOT TO SCALE

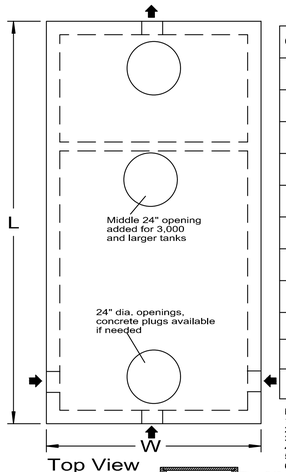

Top View

Gallons	L	W	H	LL	A	B	C	D	E	F
750	9'-6"	4'-6"	5'-11"	42"	34"	23"	51"	24"	21"	30"
1,000	10'-9"	5'-11"	4'-9"	35"	38"	16"	43"	21"	18"	23"
1,250	10'-9"	5'-11"	5'-3"	41.5"	38"	19"	49.5"	24"	21"	29"
1,500	10'-9"	5'-11"	5'-11"	49"	38"	22"	57"	27"	24"	37"
2,000	12'-6"	6'	7'-3"	58"	46"	31"	67"	32"	29"	46"
2,500	14'	6'-6"	7'-3"	58"	46"	31"	67"	32"	29"	46"
3,000	15'-6"	7'	7'-3"	58"	52"	31"	67"	32"	29"	46"
3,500	15'-6"	8'	7'-3"	58"	52"	31"	67"	32"	29"	46"
4,000	17'-2"	8'	7'-3"	58"	58"	31"	67"	32"	29"	46"
5,000	18'-8"	9'	7'-3"	58"	70"	31"	67"	32"	29"	46"
6,000	20'-4"	9'-6"	7'-3"	60"	70"	33"	69"	32"	30"	48"

Notes:
1. Effluent outlet filters are available as well as high level alarms.
2. Gas deflectors are available for 4" outlet pipes.
3. Tank designs based on the 2014 NYSDEC design standards.
4. Grease Traps are Type 2 with longer outlet baffles than Septic Tanks.
5. 1,000, 1,250, and 1,500 tanks are two-piece design with center seam.
6. Tank and cover shall be designed for H20 loading.

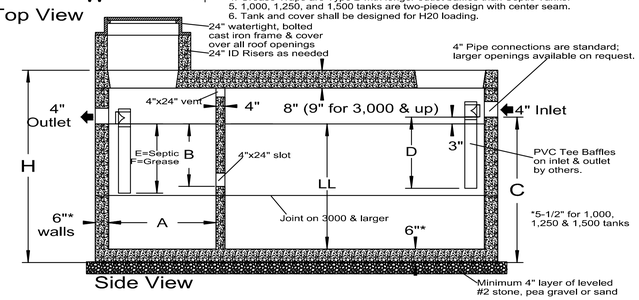

Side View

2 1000 GALLON SEPTIC TANK
NOT TO SCALE

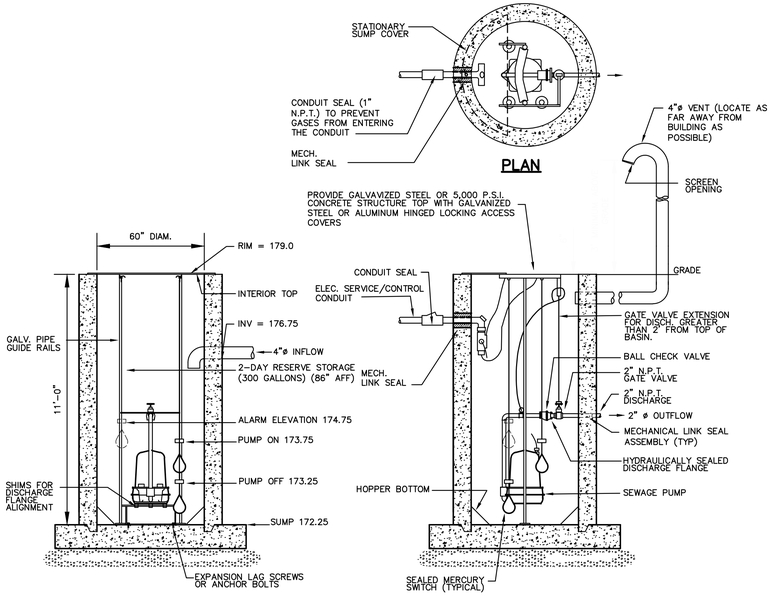

PLAN

END VIEW OF PUMP

SIDE VIEW OF PUMP

NOTES:
1. ALL PUMP STATION COMPONENTS TO BE APPROVED BY PROJECT ENGINEER PRIOR TO INSTALLATION.
2. ELECTRICAL CONTROL UNIT WITH AUDIBLE/VISUAL ALARM & PUMP CONTROLS TO BE LOCATED WITHIN THE BUILDING.
3. THE WET WELL IS SIZED TO PROVIDE HOLDING CAPACITY EQUIVALENT TO 2 DAYS AT THE AVERAGE DAY LOAD OF 300 GALLONS.
4. PUMP SHALL BE GOULDS MODEL 2ED WITH 3.56" IMPELLER, 0.5 HP.

3 DOSING CHAMBER
NOT TO SCALE

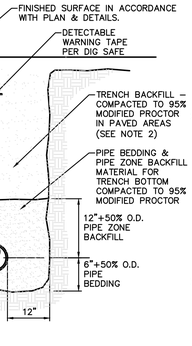

NOTES:
1. PIPE BEDDING & PIPE ZONE BACKFILL SHALL BE A NATURAL RUN-OF-BANK (R.O.B.) SAND OR A MIXTURE OF CRUSHED STONE AND GRAVEL, FREE OF SOFT, NONDURABLE PARTICLES, ORGANIC MATERIALS AND ELONGATED PARTICLES, AND SHALL BE WELL GRADED FROM FINE TO COARSE PARTICLES. BEDDING GRADATIONS SHALL BE APPROVED BY THE ENGINEER AND SHALL MEET THE FOLLOWING GRADATION REQUIREMENTS:

SIEVE DESIGNATION	% PASSING
3/4"	100%
NO. 40	0-70%
NO. 200	0-10%

2. TRENCH BACKFILL SHALL BE A NATURAL RUN-OF-BANK (R.O.B.) OR PROCESSED GRAVEL, OR EXCAVATED MATERIAL FREE OF SOFT, NONDURABLE PARTICLES, ORGANIC MATERIALS AND ELONGATED PARTICLES, AND SHALL BE WELL GRADED FROM FINE TO COARSE PARTICLES. TRENCH BACKFILL GRADATIONS SHALL BE APPROVED BY THE ENGINEER AND SHALL MEET THE FOLLOWING GRADATION REQUIREMENTS:

SIEVE DESIGNATION	% PASSING
2"	100%
#4	30-65%
NO. 40	5-40%
NO. 200	0-15%

3. INSTALL CONTINUOUS DETECTABLE MARKING TAPE DURING BACKFILLING OF TRENCH FOR UNDERGROUND PIPING. LOCATE TAPE 12" BELOW FINISHED GRADE, DIRECTLY OVER PIPING, EXCEPT 6" BELOW SUBGRADE UNDER PAVEMENTS & SLAB.
4. TRENCHING SHALL BE IMPLEMENTED IN ACCORDANCE WITH O.S.H.A. STANDARDS.
5. SEE THE SHALLOW SANITARY TRENCH DETAIL FOR WHEN COVER IS LESS THAN 4'-0".

4 SEWER PIPE TRENCH
NOT TO SCALE

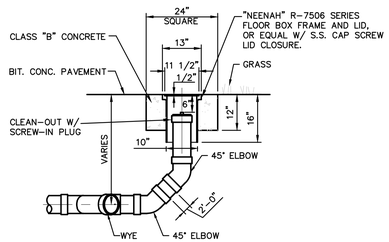

NOTES:
1. SEWER PIPE FITTINGS TO BE ASTM D-3033 OR D-3034 SDR-35.
2. TO BE USED FOR GRAVITY PORTION OF SANITARY SYSTEM AS WELL AS THE STORM ROOF DRAINAGE SYSTEM.

5 CLEAN OUT
NOT TO SCALE

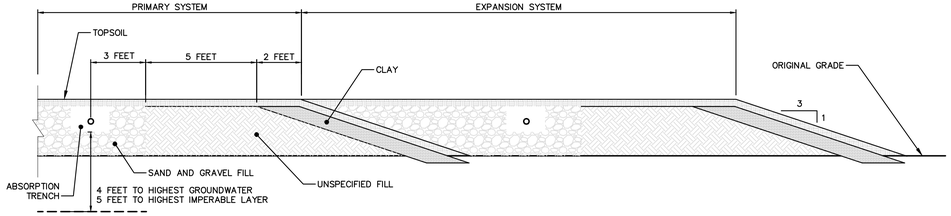

6 SANITARY DISPOSAL FIELD CROSS SECTION
NOT TO SCALE

3 OF 4 DCEHS APPROVAL

REVISIONS	BY
01/04/2021	1
02/15/2021	2
02/25/2021	3
03/24/2021	4

ALFRED A. CAPPELLI Jr., AIA
ARCHITECT
1136 ROUTE 9 WAPPINGERS FALLS, N.Y. 12590
Phone: (845) 632-6500
acappie2102@aol.com

PROPOSED LIQUID PROPANE STORAGE FACILITY
DOWNEY ENERGY
199 OLD ROUTE 9
TOWN OF WAPPINGERR. N.Y.

SITE DETAILS

DATE	11/30/2020
SCALE	AS SHOWN
DRAWN	SW JR
JOB	19-013
SHEET	S-12

File: E:\MOJ CAD\2020-09-10 DOWNEY\DOWNEY-S-10-SITE DETAILS.dwg Layout: SHEET S-12 User: SAM.WAGENDORFER Mar 23, 2021 - 7:06pm

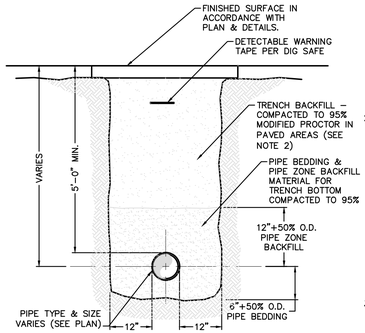

NOTES:

1. PIPE BEDDING & PIPE ZONE BACKFILL SHALL BE A NATURAL RUN–OF–BANK (R.O.B.) SAND OR A MIXTURE OF CRUSHED STONE AND GRAVEL, FREE OF SOFT, NONDURABLE PARTICLES, ORGANIC MATERIALS AND ELONGATED PARTICLES, AND SHALL BE WELL GRADED FROM FINE TO COARSE PARTICLES. BEDDING GRADATIONS SHALL BE APPROVED BY THE ENGINEER AND SHALL MEET THE FOLLOWING GRADATION REQUIREMENTS:

SIEVE DESIGNATION	% PASSING
3/4"	100%
NO. 40	0–70%
NO. 200	0–10%

2. TRENCH BACKFILL SHALL BE A NATURAL RUN–OF–BANK (R.O.B.) OR PROCESSED GRAVEL, OR EXCAVATED MATERIAL FREE OF SOFT, NONDURABLE PARTICLES, ORGANIC MATERIALS AND ELONGATED PARTICLES, AND SHALL BE WELL GRADED FROM FINE TO COARSE PARTICLES. TRENCH BACKFILL GRADATIONS SHALL BE APPROVED BY THE ENGINEER AND SHALL MEET THE FOLLOWING GRADATION REQUIREMENTS:

SIEVE DESIGNATION	% PASSING
2"	100%
¾"	30–65%
NO. 40	5–40%
NO. 200	0–15%

3. INSTALL CONTINUOUS DETECTABLE MARKING TAPE DURING BACKFILLING OF TRENCH FOR UNDERGROUND PIPING. LOCATE TAPE 12" BELOW FINISHED GRADE, DIRECTLY OVER PIPING, EXCEPT 6" BELOW SUBGRADE UNDER PAVEMENTS & SLAB.
4. TRENCHING SHALL BE IMPLEMENTED IN ACCORDANCE WITH O.S.H.A. STANDARDS.

1 WATER PIPE TRENCH
NOT TO SCALE

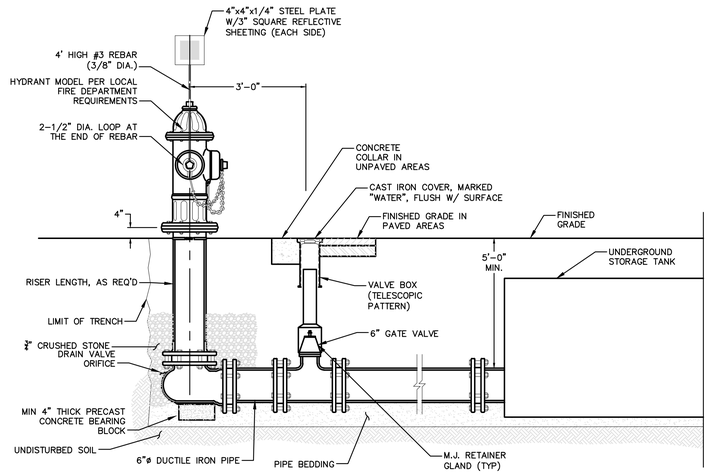

NOTES:
1. HYDRANT SHALL MEET REQUIREMENTS OF AWWA C502.
2. EXACT RISER LENGTH TO SUIT FIELD CONDITIONS AND CONFORM WITH MANUFACTURER'S RECOMMENDATIONS.

2 HYDRANT ASSEMBLY
NOT TO SCALE

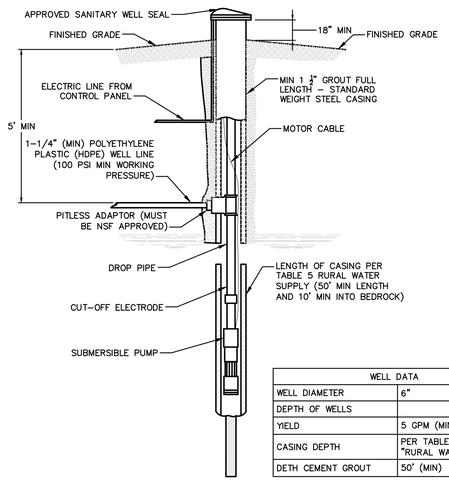

WELL DATA	
WELL DIAMETER	6"
DEPTH OF WELLS	
YIELD	5 GPM (MIN)
CASING DEPTH	PER TABLE 5 NYSDOH "RURAL WATER SUPPLY"
DETH CEMENT GROUT	50' (MIN)

NOTES:

1. SUBMERSIBLE PUMP AND PRE–CHARGED HYDROPNEUMATIC TANK SHALL BE PROVIDED. PRESSURE TANK DRAW DOWN SHALL NOT BE LESS THAN 20 GALLONS FOR A PRESSURE RANGE OF 30 TO 50 PSI. PUMP DISCHARGE CAPACITY SHALL NOT EXCEED THE DEPENDABLE YIELD OF THE WELL AT THE HIGH END OF THE PRESSURE RANGE.
2. THE DRILLED WELL SHALL BE COMPLETED WITH A DEPENDABLE YIELD OF NOT LESS THAN 5 GPM. PROVIDE WATER TREATMENT AS REQUIRED.
3. UPON COMPLETION OF CONSTRUCTION, DISINFECT WITH CHLORINE SOLUTION IN ACCORDANCE WITH NYS HEALTH DEPARTMENT SPECIFICATIONS.
4. CASING TO BE 50' MINIMUM LENGTH AND 10' MINIMUM INTO BEDROCK.
5. THE WELL SHALL BE CONSTRUCTED IN ACCORDANCE WITH TABLE 5 OF THE RURAL WATER SUPPLY HANDBOOK – NYS DEPARTMENT OF HEALTH – REVISED 1995.
6. CONSTRUCTION SHALL BE IN ACCORDANCE WITH APPENDIX 5–B OF PUBLIC HEALTH LAW 206 (18).

3 TYPICAL DRILLED WELL IN ROCK
NOT TO SCALE

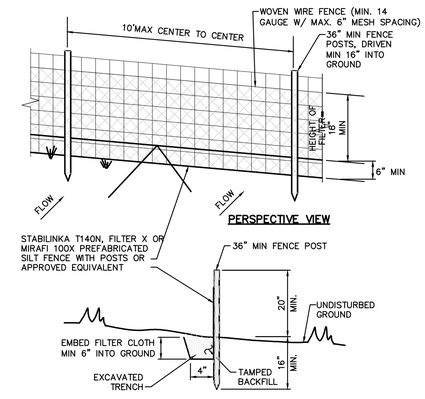

NOTES:
1. WOVEN WIRE FENCE TO BE FASTENED SECURELY TO FENCE POSTS WITH WIRE TIES OR STAPLES. POSTS SHALL BE STEEL "T" OR "U" TYPE OR HARDWOOD.
2. FILTER CLOTH TO BE FASTENED SECURELY TO WOVEN WIRE FENCE WITH TIES SPACED EVERY 24" AT TOP AND MID SECTION. FENCE SHALL BE WOVEN WIRE, 6" MAX MESH OPENING.
3. WHEN TWO SECTIONS OF FILTER CLOTH ADJOIN EACH OTHER THEY SHALL BE OVERLAPPED BY 6" AND FOLDED.
4. MAINTENANCE SHALL BE PERFORMED AS NEEDED AND MATERIALS REMOVED WHEN "BULGES" DEVELOP IN THE SILT FENCE.
5. MAXIMUM DRAINAGE AREA FOR OVERLAND FLOW TO A SILT FENCE SHALL NOT EXCEED 1/4 ACRE PER 100 FEET OF FENCE.
6. SILT FENCE SHALL BE USED WHERE EROSION COULD OCCUR IN THE FORM OF SHEET EROSION.
7. SILT FENCE SHALL NOT BE USED WHEN A CONCENTRATION OF WATER IS FLOWING TO THE BARRIER.
8. MAXIMUM ALLOWABLE SLOPE LENGTHS CONTRIBUTING RUN–OFF TO A SILT FENCE ARE:

SLOPE STEEPNESS	MAXIMUM SLOPE LENGTH(FT)
2:1	25
3:1	50
4:1	75
5:1 OR FLATTER	100

4 SILT FENCE INSTALLATION
NOT TO SCALE

4 OF 4 DCEHS APPROVAL

REVISIONS	BY
01/04/2021	1
02/15/2021	2
02/25/2021	3
03/24/2021	4

ALFRED A. CAPPELLI Jr., AIA
ARCHITECT
1136 ROUTE 9 WAPPINGERS FALLS, N.Y. 12590
Phone: (845) 632-6500
acappe2102@aol.com

PROPOSED LIQUID PROPANE STORAGE FACILITY
DOWNEY ENERGY
199 OLD ROUTE 9 TOWN OF WAPPINGERR. N.Y.

SITE DETAILS

DATE	11/30/2020
SCALE	AS SHOWN
DRAWN	SW JR
JOB	19-013
SHEET	S-13

File: D:\#DJ DATA\2020-09-10 DOWNEY\DOWNEY-S-10-SITE DETAILS.dwg Layout: SHEET S-13 User: SAM.WAZENEGGER Mar 23, 2021 - 7:05pm

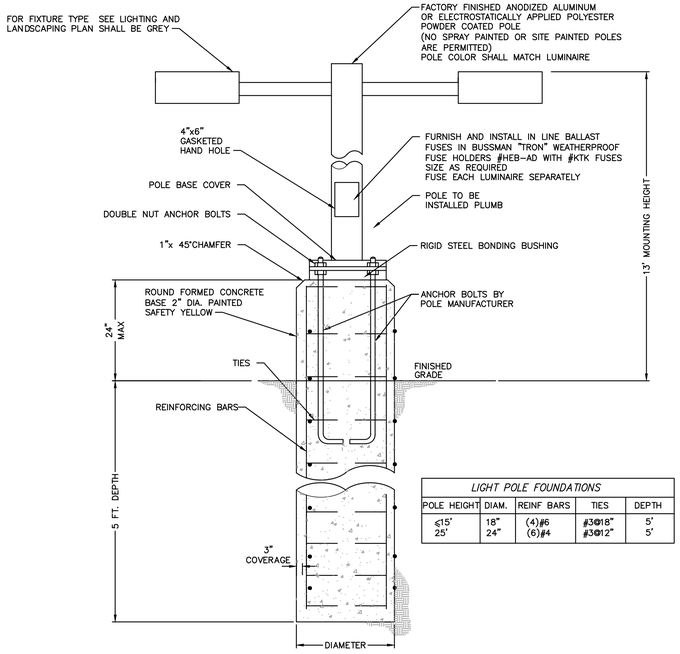

LIGHT POLE FOUNDATIONS				
POLE HEIGHT	DIAM.	REINF BARS	TIES	DEPTH
≤15'	18"	(4)#6	#3@18"	5'
25'	24"	(6)#4	#3@12"	5'

NOTES:
1. ALL CONCRETE SHALL BE 3,000 PSI @ 28 DAYS
2. DESIGNED FOR 90 MPH WIND WITH FIXTURE AREA OF 13 SF
3. FOUNDATION DIAMETER AND REINFORCING CIRCLE SHALL BE COORDINATED WITH ANCHOR BOLT LIMITS
4. FOUNDATIONS SHALL BEAR ON UNDISTURBED NATURAL SOIL OR COMPACTED CRUSH STONE
5. ALL EXCAVATIONS SHALL BE BACKFILLED WITH STRUCTURAL FILL AND COMPACTED TO 95% OF MAXIMUM MATERIAL DENSITY
6. EXPOSED AREAS OF CONCRETE AND ONE FOOT MIN BELOW FINISHED GRADE SHALL BE FORMED

1 LAMP POST BASE AND CONCRETE BASE
NOT TO SCALE

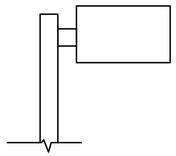

NOTE:
WLS LIGHTING SYSTEMS – SEE LIGHTING AND LANDSCAPING PLAN FOR FIXTURE SCHEDULE.

2 LIGHTING FIXTURE
NOT TO SCALE

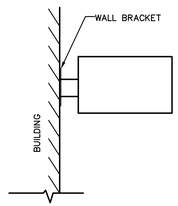

NOTE:
WLS LIGHTING SYSTEMS – SEE LIGHTING AND LANDSCAPING PLAN FOR FIXTURE SCHEDULE.

3 WALL MOUNTED LIGHTING FIXTURE
NOT TO SCALE

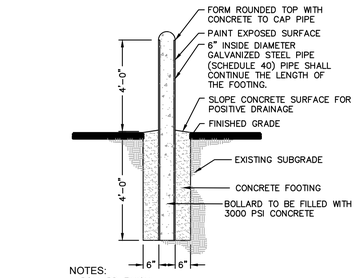

NOTES:
1. BOLLARD FINISH:
   PREPARE GALVANIZED COATING TO RECEIVE PAINTED FINISH. APPLY (1) COAT OF RUST INHIBITOR PRIMER. APPLY (2) COATS OF GLOSS ENAMEL (COLOR TO BE SELECTED BT THE OWNER.)
2. ALL CONCRETE SHALL HAVE A MINIMUM COMPRESSIVE STRENGTH OF 3,000 PSI @ 28 DAYS.
3. ALL CONCRETE SHALL HAVE A SLUMP OF NO GREATER THAN 4" (WITH A TOLERANCE OF 1").
4. ALL CONCRETE SHALL HAVE A 5% ENTRAINED AIR (WITH A TOLERANCES OF 1%) CONFORMING WITH ASTM C260.

4 STEEL AND CONCRETE BOLLARD
NOT TO SCALE

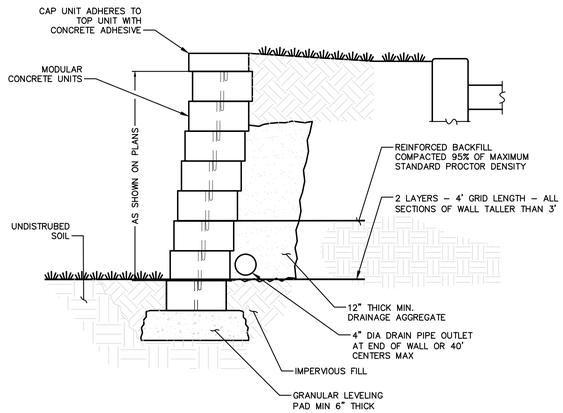

5 SEGMENTED BLOCK RETAINING WALL
NOT TO SCALE

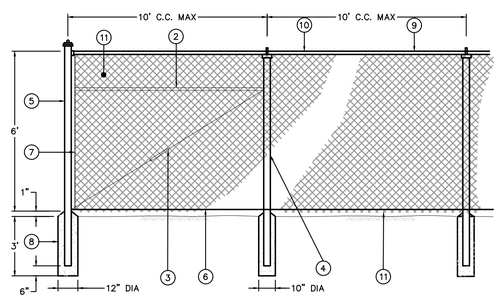

1. 1 5/8" O.D. TOP RAIL ATTACH TO THE C.L. FABRIC WITH 9 GAUGE WIRE CLIP EVERY 24"
2. 1 5/8" O.D. BRACE RAIL FENCES OVER 6 FEET FEET HIGH AND ALL FENCES WITHOUT TOP RAIL
3. 3/8" TRUSS ROD AND TURNBUCKLE
4. INTERMEDIATE POST

FENCE HEIGHT	SQUARE POST	ROUND POST
6 FEET AND LESS	1 5/8"	2"
OVER 6 FEET	2 1/2"	2 1/2"

   ATTACH TO C.L. FABRIC WITH CLIPS EVERY 15"
5. END OR CORNER POST

FENCE HEIGHT	SQUARE POST	ROUND POST
6 FEET AND LESS	2"	2 1/2"
OVER 6 FEET	2 1/2"	3"

6. 6 GAUGE BOTTOM TENSION WIRE ATTACH TO C.L. FABRIC WITH HOG RING AT 24" C.C.
7. TENSION ROD ATTACHED TO END OR CORNER POST
8. CONCRETE FOOTING 36" DEEP WITH 12" DIA. AT END POST AND 10" DIA. AT INTERMEDIATE POST. HOLE CORE IN UNDISTURBED OR COMPACTED SOIL. (SEE FOOTING DESIGN NOTE)
9. TOP RAIL
10. FABRIC SELVAGE UNDER 6 FEET SHALL BE KNUCKLED TOP AND BOTTOM 6 FEET AND OVER SHALL BE KNUCKLED BOTTOM AND TWISTED ON THE TOP RECREATIONAL FENCING, REGARDLESS OF HEIGHT, SHALL BE KNUCKLED TOP AND BOTTOM.
11. BLACK VINYL COATED WIRE MESH FABRIC WITH PRIVACY SLATS WHERE SPECIFIED

6 CHAIN LINK FENCE
NOT TO SCALE

REVISIONS	BY
01/04/2021	1
02/15/2021	2
03/24/2021	3

ALFRED A. CAPPELLI Jr., AIA
ARCHITECT
1136 ROUTE 9 WAPPINGERS FALLS, N.Y. 12590
Phone: (845) 632-6500
acappe2102@aol.com

PROPOSED LIQUID PROPANE STORAGE FACILITY
DOWNEY ENERGY
199 OLD ROUTE 9 TOWN OF WAPPINGERR. N.Y.

SITE DETAILS

DATE	11/30/2020
SCALE	AS SHOWN
DRAWN	SW JR
JOB	19-013
SHEET	S-14

File: D:\WKU CAD\2020-09-10 DOWNEY\DOWNEY-S-10-SITE DETAILS.dwg Layout: SHEET S-14 User: SAMWAINEGEGER Mar 23, 2021 - 7:09pm

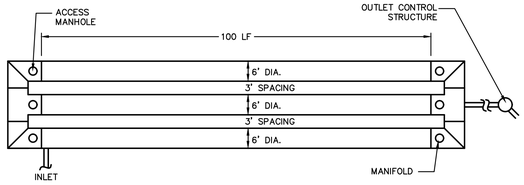

NOTES:

1. PROPOSED EQUAL DETENTION SYSTEMS OF DIFFERENT MATERIALS SUCH AS HIGH DENSITY POLYETHYLENE SHALL BE APPROVED BY THE ENGINEER.

1 STORMWATER DETENTION SYSTEM MANIFOLD

NOT TO SCALE

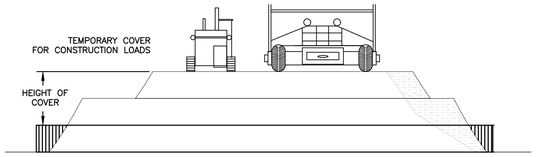

CONSTRUCTION LOADS:
FOR TEMPORARY CONSTRUCTION VEHICLE LOADS, AN EXTRA AMOUNT OF COMPACTED COVER MAY BE REQUIRED OVER THE TOP OF THE PIPE. THE HEIGHT-OF-COVER SHALL MEET THE MINIMUM REQUIREMENTS SHOWN IN THE TABLE BELOW. THE USE OF HEAVY CONSTRUCTION EQUIPMENT NECESSITATES GREATER PROTECTION FOR THE PIPE THAN FINISHED GRADE COVER MINIMUMS FOR NORMAL HIGHWAY TRAFFIC.

PIPE SPAN, INCHES	AXLE LOADS (kips)			
	18-50	50-75	75-110	110-150
	MINIMUM COVER (FT)			
12-42	2.0	2.5	3.0	3.0
48-72	3.0	3.0	3.5	4.0
78-120	3.0	3.5	4.0	4.0
126-144	3.5	4.0	4.5	4.5

*MINIMUM COVER MAY VARY, DEPENDING ON LOCAL CONDITIONS. THE CONTRACTOR MUST PROVIDE THE ADDITIONAL COVER REQUIRED TO AVOID DAMAGE TO THE PIPE. MINIMUM COVER IS MEASURED FROM THE TOP OF THE PIPE TO THE TOP OF THE MAINTANED CONSTRUCTION ROADWAY SURFACE.

4 TEMPORARY CONSTRUCTION LOADING

NOT TO SCALE

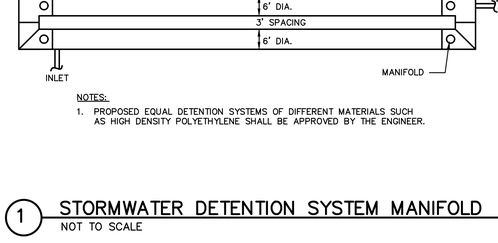

NOTES:

1. THE CONCRETE CAP SHALL BE SIZED AND DESIGNED BY OTHERS SO THAT THE LOADS ARE TRANSMITTED TO THE SOIL, AND NOT THE RISER.
2. THE CONCRETE CAP SHALL BE SIZED TO PROVIDE AN ADEQUATE BOTTOM AREA BASED ON THE ALLOWABLE BEARING CAPACITY OF THE SOIL.
3. THE FLEXIBLE JOINT MATERIAL (RECYCLED VINYL OR EQ.) TO BE STIFF ENOUGH SO THAT THE CONCRETE CAN NEVER ENGAGE WITH THE RISER CORRUGATIONS.

5 MANHOLE/CATCH BASIN CAP

NOT TO SCALE

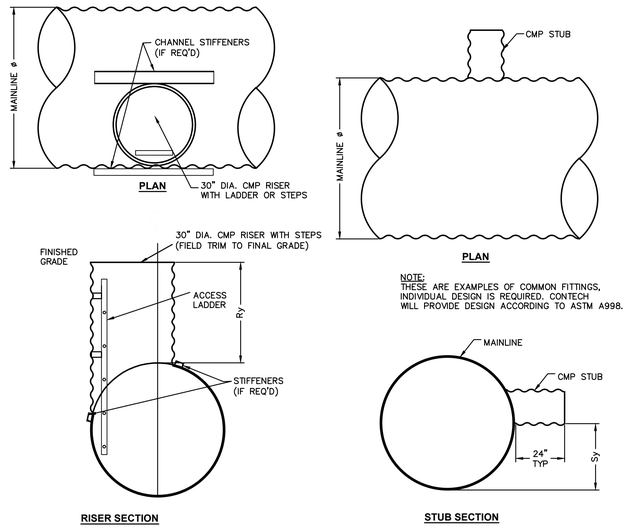

NOTE:
THESE ARE EXAMPLES OF COMMON FITTINGS, INDIVIDUAL DESIGN IS REQUIRED. CONTECH WILL PROVIDE DESIGN ACCORDING TO ASTM A998.

2 STORMWATER DETENTION SYSTEM FITTINGS

NOT TO SCALE

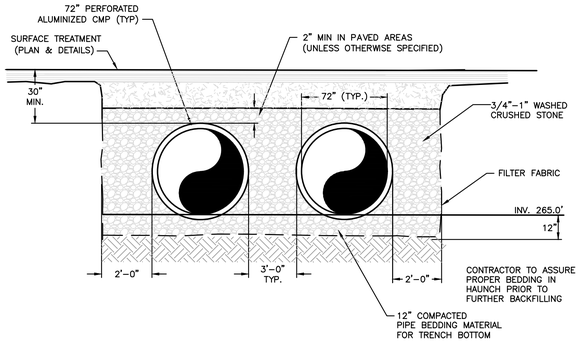

NOTES:

1. PIPE BEDDING MATERIAL SHALL BE A NATURAL RUN-OF-BANK (R.O.B.) SAND OR A MIXTURE OF CRUSHED STONE AND GRAVEL, FREE OF SOFT, NON-DURABLE PARTICLES, ORGANIC MATERIALS AND ELONGATED PARTICLES, AND SHALL BE WELL GRADED FROM FINE TO COARSE PARTICLES. BEDDING GRADATIONS SHALL BE APPROVED BY THE ENGINEER AND SHALL MEET THE FOLLOWING GRADATION REQUIREMENTS:

SIEVE DESIGNATION	% PASSING
3/4"	100%
NO. 40	0-70%
NO. 200	0-10%

2. NO TRAFFIC, PARKING OR STORAGE OF HEAVY EQUIPMENT WITHIN THE STORMWATER DETENTION PIPE AREA IS ALLOWED WITHOUT THE INSTALLATION OF ASPHALT PAVEMENT, UNLESS APPROVED BY THE ENGINEER.

3 TYPICAL DETENTION SYSTEM CROSS SECTION

NOT TO SCALE

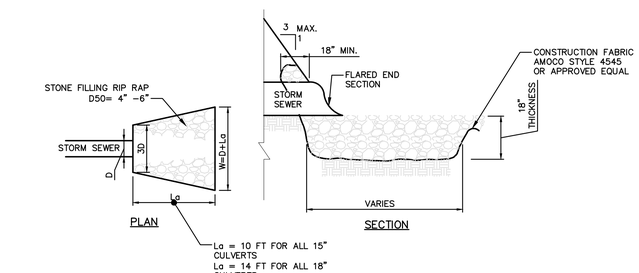

6 RIP-RAP OUTLET PROTECTION DETAIL

NOT TO SCALE

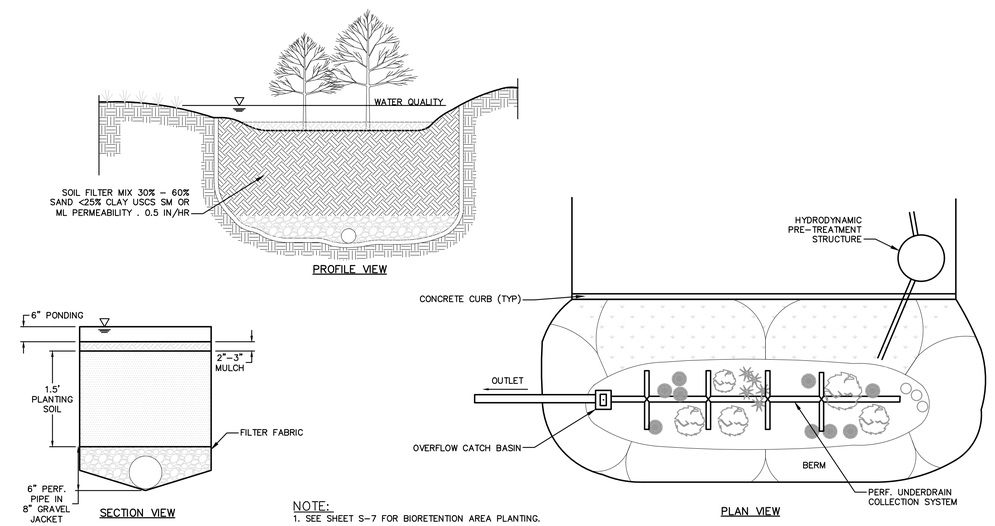

NOTE:
1. SEE SHEET S-7 FOR BIORETENTION AREA PLANTING.

7 BIORETENTION CROSS SECTION

NOT TO SCALE

REVISIONS	BY
01/04/2021	1
02/15/2021	2

ALFRED A. CAPPELLI Jr., AIA
ARCHITECT
1136 ROUTE 9 WAPPINGERS FALLS, N.Y. 12590
Phone: (845) 632-6500
acappie2102@aol.com

PROPOSED LIQUID PROPANE STORAGE FACILITY
DOWNEY ENERGY
199 OLD ROUTE 9
TOWN OF WAPPINGERR. N.Y.

SITE DETAILS

DATE	11/30/2020
SCALE	AS SHOWN
DRAWN	SW JR
JOB	19-013
SHEET	S-15

File: D:\WKU CAD\2020-09-10 DOWNEY\DOWNEY-S-10-SITE DETAILS.dwg Layout: SHEET S-15 User: SAMWAINEGEGER Mar 23, 2021 - 7:05pm

STANDARD NOTES FOR COMMERCIAL PROJECTS (ONSITE WATER SOURCE AND SEWAGE DISPOSAL)- W/NO PWS

1. THE DESIGN, CONSTRUCTION AND INSTALLATION SHALL BE IN ACCORDANCE WITH THIS PLAN AND GENERALLY ACCEPTED STANDARDS IN EFFECT AT THE TIME OF CONSTRUCTION WHICH INCLUDE:
2. "NEW YORK STATE DESIGN STANDARDS FOR INTERMEDIATE SIZED WASTEWATER TREATMENT SYSTEMS", NYSDEC"
3. APPENDIX 75-A, WASTE TREATMENT – INDIVIDUAL HOUSEHOLD SYSTEMS, NEW YORK STATE SANITARY CODE." "RECOMMENDED STANDARDS FOR SEWAGE TREATMENT WORKS, (TEN STATES)."
4. "NEW YORK STATE DEPARTMENT OF HEALTH AND DUTCHESS COUNTY ENVIRONMENTAL HEALTH SERVICES DIVISION POLICIES, PROCEDURES AND STANDARDS."
5. "DUTCHESS COUNTY AND NEW YORK STATE SANITARY CODES."
6. "DUTCHESS COUNTY ENVIRONMENTAL HEALTH SERVICES DIVISION CERTIFICATE OF APPROVAL LETTER."
7. THIS PLAN IS APPROVED AS MEETING THE APPROPRIATE AND APPLIED TECHNICAL STANDARDS, GUIDELINES, POLICIES AND PROCEDURES FOR ARRANGEMENT OF SEWAGE DISPOSAL AND TREATMENT AND WATER SUPPLY FACILITIES.
8. UPON COMPLETION OF THE FACILITIES, THE FINISHED WORKS SHALL BE INSPECTED, TESTED, AND CERTIFIED COMPLETE TO THE DC EHSD BY THE NEW YORK STATE REGISTERED DESIGN PROFESSIONAL SUPERVISING CONSTRUCTION. NO PART OF THE FACILITIES SHALL BE PLACED INTO SERVICE UNTIL ACCEPTED BY THE DC EHSD.
9. APPROVAL OF ANY PLAN(S) OR AMENDMENT THERETO SHALL BE VALID FOR A PERIOD OF 5 YEARS FROM THE DATE OF APPROVAL. FOLLOWING THE EXPIRATION OF SAID APPROVAL, THE PLAN(S) SHALL BE RE-SUBMITTED TO THE COMMISSIONER OF HEALTH FOR CONSIDERATION FOR RE-APPROVAL. RE-SUBMISSION OR REVISED SUBMISSION OF PLANS AND/OR ASSOCIATED DOCUMENTS SHALL BE SUBJECT TO COMPLIANCE WITH THE TECHNICAL STANDARDS, GUIDELINES, POLICIES AND PROCEDURES IN EFFECT AT THE TIME OF THE RE-SUBMISSION.
10. ALL WELLS AND ONSITE WASTEWATER TREATMENT SYSTEM EXISTING OR APPROVED WITHIN 300 FEET OF THE PROPOSED WELLS AND ONSITE WASTEWATER TREATMENT SYSTEM ARE SHOWN ON THIS PLAN ALONG WITH ANY OTHER ENVIRONMENTAL HAZARDS IN THE AREA THAT MAY AFFECT THE DESIGN AND FUNCTIONAL ABILITY OF THE ONSITE WASTEWATER TREATMENT SYSTEM AND WELL.
11. IT SHALL BE DEMONSTRATED BY THE CONTRACTOR TO THE DC EHSD FIELD INSPECTOR AND/OR DESIGN PROFESSIONAL THAT THE TANK IS SEALED, WATERTIGHT AND ACCEPTABLE FOR USE. THIS SHALL REQUIRE, AT A MINIMUM, THE FILLING OF THE TANK WITH WATER TO OBSERVE IF IT IS IN FACT SEALED, WATERTIGHT AND ACCEPTABLE FOR USE. THE TANK MUST ALSO MEET ANY LOCAL TESTING REQUIREMENTS, INCLUDING POSSIBLE ELECTRICAL AND SAFETY STANDARDS.
12. ALL PROPOSED WELLS AND SERVICE LINES ON THIS PLAN ARE ACCESSIBLE FOR INSTALLATION AND PLACEMENT.
13. NO CELLAR, FOOTING, FLOOR, GARAGE, COOLER OR ROOF DRAINS SHALL BE DISCHARGED INTO THE ONSITE WASTEWATER TREATMENT SYSTEM OR WITHIN 50 FEET OF ANY WELL.
14. ALL BUILDINGS SHALL BE CONSTRUCTED AT AN ELEVATION HIGH ENOUGH TO ENSURE GRAVITY FLOW TO THE ONSITE WASTEWATER TREATMENT SYSTEM.
15. THERE SHALL BE NO VEHICULAR TRAFFIC OVER THE ONSITE WASTEWATER TREATMENT SYSTEM. PRIOR TO CONSTRUCTION, THE AREA OF THE SYSTEM SHALL BE STAKED OUT AND FENCED OFF.
16. ONSITE WASTEWATER TREATMENT SYSTEMS SHALL NOT BE INSTALLED IN WET OR FROZEN SOIL.
17. THE DC EHSD SHALL BE NOTIFIED PRIOR TO THE BACKFILLING OF ANY COMPLETED ONSITE WASTEWATER TREATMENT SYSTEM SO THAT A FINAL INSPECTION MAY BE PERFORMED.
18. THE DC EHSD SHALL BE NOTIFIED SIXTY DAYS PRIOR TO ANY CHANGE IN USE; USE CHANGES MAY REQUIRE RE APPROVAL BY THE DC EHSD.
19. ALL REQUIRED EROSION & SEDIMENT CONTROL AND STORMWATER POLLUTION PREVENTION WATER QUALITY & QUANTITY CONTROL STRUCTURES, PERMANENT AND TEMPORARY, ARE SHOWN ON THE PLANS.
20. THE UNDERSIGNED OWNERS OF THE PROPERTY HEREON STATE THAT THEY ARE FAMILIAR WITH THIS MAP, ITS CONTENTS AND ITS LEGENDS AND HEREBY CONSENT TO ALL SAID TERMS AND CONDITIONS AS STATED HEREON.

ADDITIONAL NOTES FOR FILL SECTIONS

21. SEPTIC FILL SPECIFICATION: SAND AND GRAVEL FILL, WITH A STABILIZED PERCOLATION RATE WHICH IS LESS THAN OR EQUIVALENT TO THE PERCOLATION RATE OF THE VIRGIN SOIL, AND NO MORE THAN 15 MINUTES PER INCH SHALL BE USED.
22. A NEW YORK STATE REGISTERED DESIGN PROFESSIONAL SHALL CERTIFY IN WRITING THAT THE FILL MATERIAL IS IN THE PROPER LOCATION, OF THE PROPER QUANTITY AND DIMENSIONS, AND OF PROPER QUALITY. PROPER QUALITY MUST BE DEMONSTRATED BY STABILIZED PERCOLATION TESTS, THE RESULTS OF WHICH SHALL BE SUBMITTED WITH THE ENGINEER'S CERTIFICATION.
23. PRIOR TO THE PLACEMENT OF THE FILL, THE AREA OF THE OWTS SHALL BE CLEARED OF DEBRIS, AND ALL BRUSH, TREES, OR OTHER VEGETATION CUT TO THE LEVEL OF THE VIRGIN GROUND. NO TOPSOIL SHALL BE REMOVED UNLESS SPECIFICALLY INDICATED ON THE PLANS.

TEST PIT DATA (11/19/2020)

PRIMARY AREA

TEST PIT 3
0" – 6" TOPSOIL
6" – 5' SANDY SILT LOAM
5' – 7'–6" HARDPAN SILT (NO GW)

EXPANSION AREA

TEST PIT 2
0" – 3" TOPSOIL
3"–3' – 3' SANDY SILT LOAM
3'–3" – 7'–0" HARDPAN SILT (NO GW)

PERC PIT DATA (11/20/2020)

PT–1

STABILIZED PERC RATE = 32 MIN/IN

PT–2

STABILIZED PERC RATE = 30 MIN/IN
USE APPLICATION RATE = 0.5 GAL/DAY/SF

USE: UNOCCUPIED BUILDING

DESIGN FLOW = 150 GAL/DAY (10 EMPLOYEE EQUIVALENT OR 0.08 GAL/SF)

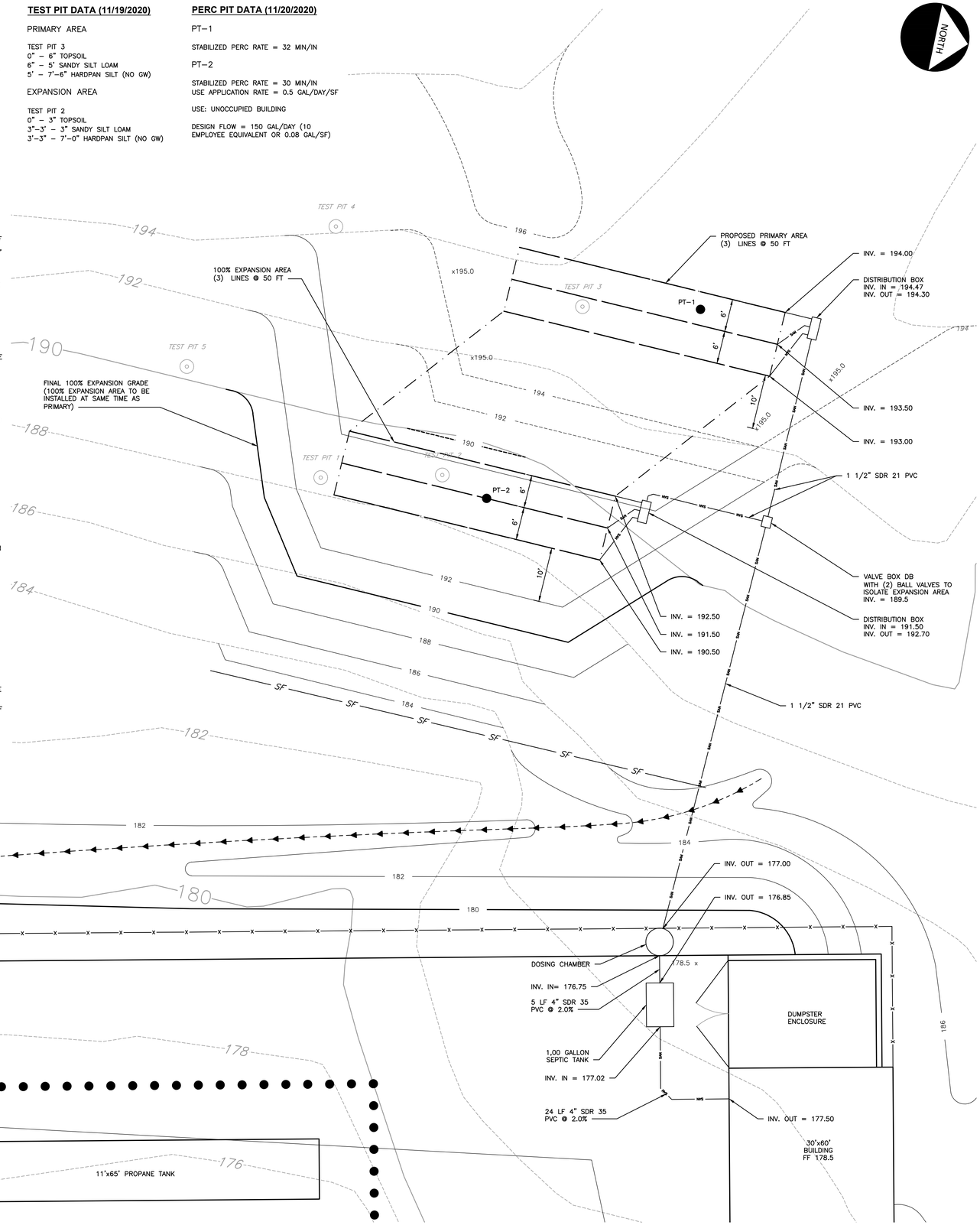

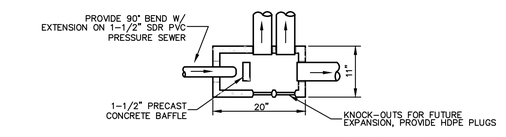

NOTES:
1. DISTRIBUTION BOX TO BE PROVIDED WITH PRE–FABRICATED SPEED LEVELERS AND LEVELED USING WATER.
2. FORT MILLER TYPE 1, DESIGN CASE 4 (NON–TRAFFIC) OR APPROVED EQUAL.

1 TYPE 1 DISTRIBUTION BOX (PRESSURE INLET)
NOT TO SCALE

NOTES:
1. IMPORTED BACKFILL SHALL BE TOPSOIL OR NATURAL RUN OF BANK SAND OR GRAVEL FREE OF ORGANIC MATERIAL AND ELONGATED PARTICLE AND HAVE A MAX PARTICLE SIZE OF ¾".

2 ABSORPTION TRENCH
NOT TO SCALE

2 OF 4 DCEHS APPROVAL

REVISIONS	BY
01/04/2021	1
02/15/2021	2
02/25/2021	3
03/24/2021	4

ALFRED A. CAPPELLI Jr., AIA
ARCHITECT
1136 ROUTE 9 WAPPINGERS FALLS, N.Y. 12590
Phone: (845) 632-6500
acappe2102@aol.com

PROPOSED LIQUID PROPANE STORAGE FACILITY
DOWNEY ENERGY
199 OLD ROUTE 9 TOWN OF WAPPINGERR. N.Y.

SUBSURFACE SEWEAGE DISPOSAL SYSTEM PLAN

DATE	11/30/2020
SCALE	1" = 20'
DRAWN	SW JR
JOB	19-013
SHEET	S-16

File: D:\VBU CAD\2020-09-10 DOWNEY\DOWNEY-S-11-SDS PLAN.dwg Layout: SHEET S-16 User: SAM.WAZENEGGER Mar 25, 2021 - 8:29pm