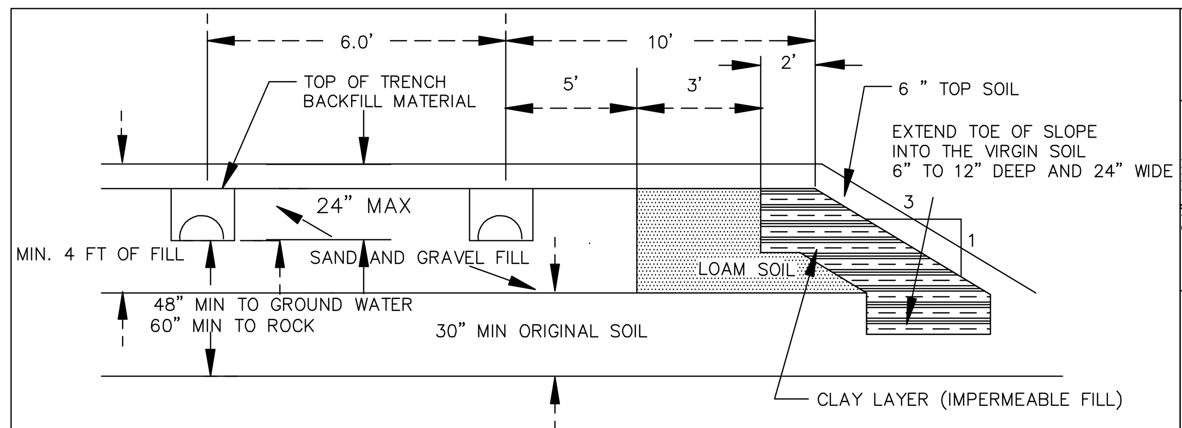


1. THE CONTRACTOR MUST NOTIFY A QUALIFIED PROFESSIONAL ENGINEER PRIOR TO THE START OF CONSTRUCTION.
2. ALL LATERALS AND THE DISTRIBUTION BOX MUST BE OBSERVED BY THE PROFESSIONAL ENGINEER PRIOR TO BEING BACKFILLED.
3. A 2 FOOT CLAY BERM MUST BE INSTALLED AROUND THE ENTIRE S.D.S.
4. FILL AND IMPERVIOUS COVER MUST BE IN PLACE AND A PROFESSIONAL ENGINEER SHALL CERTIFY IN WRITING THAT ALL SOIL CONDITIONS ARE SATISFACTORY TO ALLOW USE OF THE S.D.S.
5. FILL SHALL BE PLACED IN 6 INCH LIFTS AND MECHANICALLY, LIGHTLY COMPACTED OR ALLOWED TO SETTLE FOR A 6 TO 9 MONTH PERIOD INCLUDING ONE WINTER.
6. THE FINAL TOP OF FILL PAD FOR THE PROPOSED S.D.S. SHALL BE GRADED PER PLAN.
7. THE SYSTEM WILL BE GRAVITY FED FROM DISTRIBUTION BOXES AS SHOWN ON THE PLANS. A MINIMUM OF 2 FT OF SOLID PIPE IS REQUIRED BETWEEN THE D-BOX AND THE CHAMBER.
8. SAND AND GRAVEL FILL, WITH STABILIZED PERCOLATION RATE WHICH IS LESS THAN OR EQUIVALENT TO THE PERCOLATION RATE OF THE VIRGIN SOIL, AND NO MORE THAN 15 MINUTES PER INCH SHALL BE USED. THE DESIGN ENGINEER SHALL CERTIFY IN WRITING THAT THE FILL MATERIAL IS IN THE PROPER PLACE, IS OF THE PROPER QUANTITY AND DIMENSION, AND IS OF PROPER QUALITY. PROPER QUALITY MUST BE DEMONSTRATED BY STABILIZED PERCOLATION TESTS, THE RESULTS OF WHICH SHALL BE SUBMITTED WITH THE ENGINEER'S CERTIFICATION.

CONVENTIONAL FILL SECTION
NOT TO SCALE

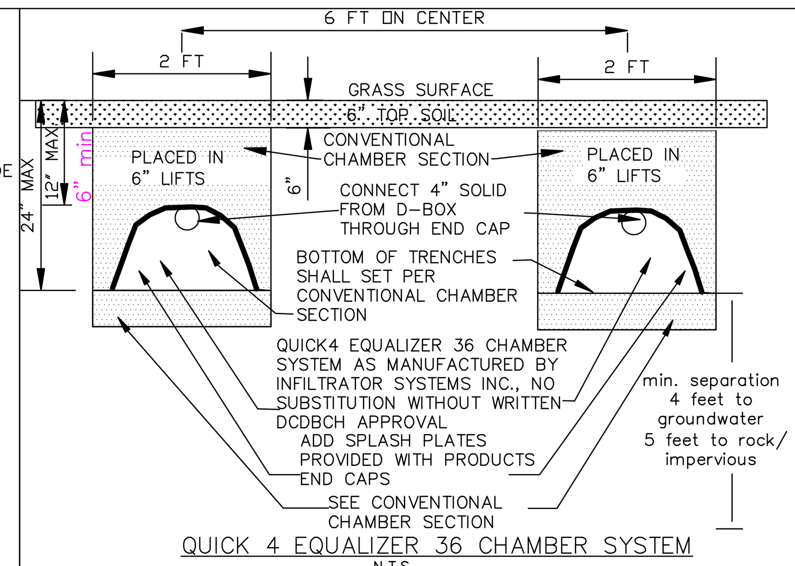


QUICK 4 EQUALIZER 36 CHAMBER SYSTEM
N.T.S.

ADDITIONAL NOTES FOR FILL SECTIONS

SEPTIC FILL SPECIFICATION: SAND AND GRAVEL FILL, WITH A STABILIZED PERCOLATION RATE WHICH IS LESS THAN OR EQUIVALENT TO THE PERCOLATION RATE OF THE VIRGIN SOIL, AND NO MORE THAN 15 MINUTES PER INCH SHALL BE USED.

A NEW YORK STATE REGISTERED DESIGN PROFESSIONAL SHALL CERTIFY IN WRITING THAT THE FILL MATERIAL IS IN THE PROPER LOCATION, OF THE PROPER QUANTITY AND DIMENSIONS, AND OF PROPER QUALITY. PROPER QUALITY MUST BE DEMONSTRATED BY STABILIZED PERCOLATION TESTS, THE RESULTS OF WHICH SHALL BE SUBMITTED WITH THE ENGINEER'S CERTIFICATION.

PRIOR TO THE PLACEMENT OF THE FILL, THE AREA OF THE OWTS SHALL BE CLEARED OF DEBRIS, AND ALL BRUSH, TREES, OR OTHER VEGETATION CUT TO THE LEVEL OF THE VIRGIN GROUND. NO TOPSOIL SHALL BE REMOVED UNLESS SPECIFICALLY INDICATED ON THE PLANS.

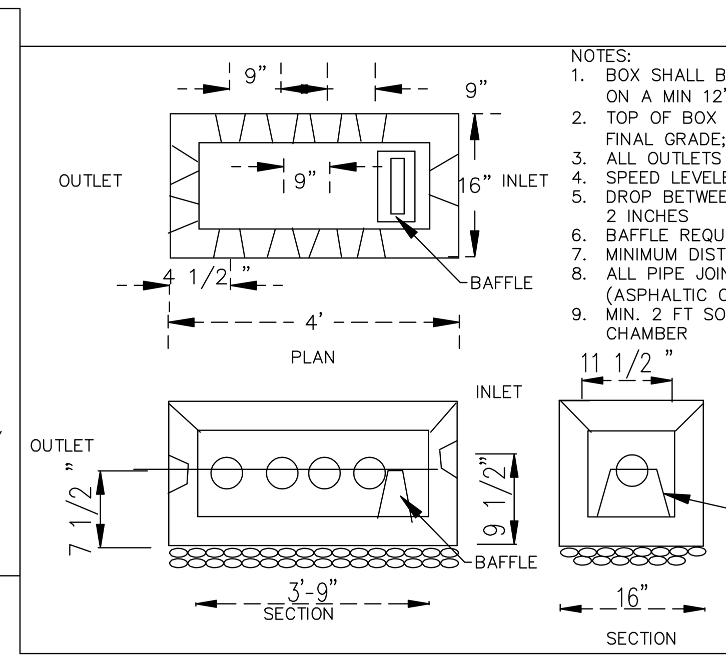


NOTES:
1. BOX SHALL BE SET LEVEL IN ALL DIRECTIONS ON A MIN 12" BED OF PEA GRAVEL OR SAND
2. TOP OF BOX SHALL BE 6" TO 12" BELOW FINAL GRADE; 12" MAXIMUM
3. ALL OUTLETS SHALL BE SET LEVEL
4. SPEED LEVELERS REQUIRED
5. DROP BETWEEN INLET AND OUTLETS SHALL BE 2 INCHES
6. BAFFLE REQUIRED
7. MINIMUM DISTANCE FROM HOUSE IS 20 FEET
8. ALL PIPE JOINTS SHALL BE SEALED (ASPHALTIC OR EQUAL)
9. MIN. 2 FT SOLID PIPE BETWEEN D-BOX AND CHAMBER

DISTRIBUTION BOX DETAIL
NOT TO SCALE

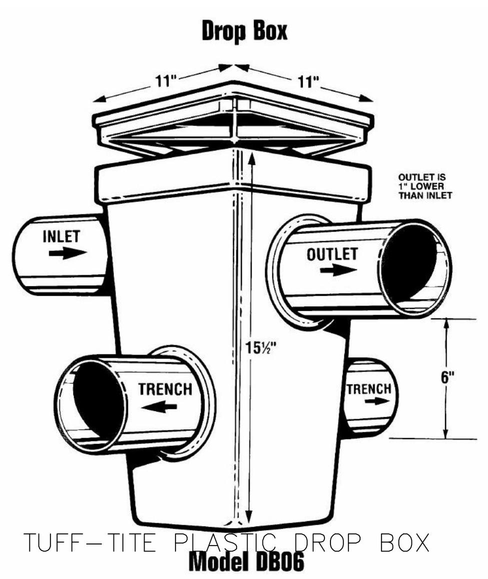


TUFF-TITE PLASTIC DROP BOX

DROP BOX NOTES:
1. FOR SLOPES BETWEEN ROWS 10% TO 15% INSTALL A DROP BOX AT EACH BEGINNING OF EACH ROW.
2. NO SLOPE GREATER THAN 15% ALLOWED BETWEEN ROWS.
3. PLACE ON 12" PEA STONE OR SAND
4. SPEED LEVELERS REQUIRED.
5. PLUG UNUSED OPENINGS.
6. SEE DISTRIBUTION BOX DETAIL FOR ADDITIONAL SPECIFICATIONS.

1000 & 1250 GALLON SEPTIC TANK PROPOSED FOR THIS PROJECT

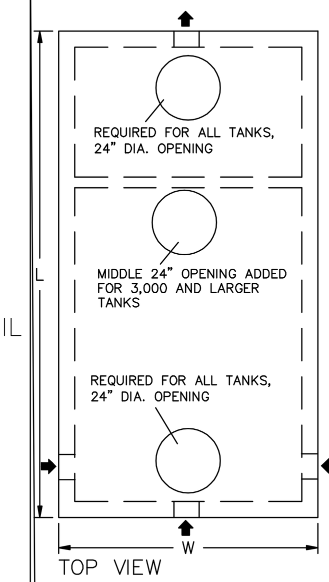


| Gallons | L | W | H | LL | A | B | C | D | E | F |
|---|---|---|---|---|---|---|---|---|---|---|
| 750 | 9'-6" | 4'-6" | 5'-11" | 42" | 34" | 23" | 51" | 24" | 21" | 30" |
| 1,000 | 10'-9" | 5'-11" | 4'-9" | 35" | 38" | 16" | 43" | 21" | 18" | 23" |
| 1,250 | 10'-9" | 5'-11" | 5'-3" | 41.5" | 38" | 19" | 49.5" | 24" | 21" | 29" |
| 1,500 | 10'-9" | 5'-11" | 5'-11" | 49" | 38" | 22" | 57" | 27" | 24" | 37" |
| 2,000 | 12'-6" | 6' | 7'-3" | 58" | 46" | 31" | 67" | 32" | 29" | 46" |
| 2,500 | 14' | 6'-6" | 7'-3" | 58" | 46" | 31" | 67" | 32" | 29" | 46" |
| 3,000 | 15'-6" | 7' | 7'-3" | 58" | 52" | 31" | 67" | 32" | 29" | 46" |
| 3,500 | 15'-6" | 8' | 7'-3" | 58" | 52" | 31" | 67" | 32" | 29" | 46" |
| 4,000 | 17'-2" | 8' | 7'-3" | 58" | 58" | 31" | 67" | 32" | 29" | 46" |
| 5,000 | 18'-8" | 9' | 7'-3" | 58" | 70" | 31" | 67" | 32" | 29" | 46" |
| 6,000 | 20'-4" | 9'-6" | 7'-3" | 60" | 70" | 33" | 69" | 32" | 30" | 48" |

MANUFACTURERS NOTES:
1. 1,000, 1,250, AND 1,500 TANKS ARE TWO-PIECE DESIGN WITH CENTER SEAM.

SEPTIC TANK NOTES
1. SEPTIC TANK SHALL BE PRECAST REINFORCED CONCRETE TANK AND SHALL MEET H-20 LOADING HAVING CONCRETE TESTING TO 4000 PSI AT 28 DAYS. TANK SHALL HAVE MIN WALL THICKNESS OF 6".
2. TANK SHALL HAVE TWO BITUMINOUS COATS ON INSIDE AND OUTSIDE PRIOR TO ARRIVING AT SITE.
3. CONTRACTOR SHALL SUBMIT SHOP DRAWING TO CERTIFYING ENGINEER AT LEAST 1 WEEK PRIOR TO ORDERING SEPTIC TANK.
4. TANK SHALL BE PLACED ON A MINIMUM 4" BED OF SAND OR PEA GRAVEL AND PLACED FOLLOWING MANUFACTURES INSTRUCTIONS. THE RISERS OF THE TANK SHALL EXTEND TO THE GROUND SURFACE.
5. TANK SHALL BE INSTALLED LEVEL IN ALL DIRECTIONS
6. ALL JOINTS AND PIPE OPENINGS SHALL BE SEALED SO THAT THE TANK IS WATER TIGHT.
7. ALL JOINTS SHALL HAVE BUTYL ROPE OR APPROVED EQUAL.
8. ALL PIPE CONNECTIONS AT TANK SHALL BE POLYLOK SEALS OR APPROVED EQUAL.
9. ALL JOINTS AND TANK SHALL PASS VACUUM TEST ASTM C-1719, PRIOR TO BACKFILLING OR HYDROSTATIC TEST ASTM C-1227-05 OR CURRENT VERSION AFTER BACKFILLING.
10. CONTRACTOR SHALL NOTIFY DEPARTMENT OF HEALTH AND CERTIFYING ENGINEER AT LEAST 72 HOURS PRIOR TO INSTALLING OR TESTING TANK.
11. SEWER SHALL BE 4" SCHD 80 PVC OR 4" DUCTILE IRON INTO TANK AT A MINIMUM GRADE OF 1/4 INCH PER FOOT AND 4" SCHD 80 PVC OUT OF TANK AT A MINIMUM GRADE OF 1/8 INCH PER FOOT WITHOUT ANY BENDS OR DEFLECTIONS UNLESS SHOWN.
12. CLEANOUT SHALL BE PLACED ON LINE OUTSIDE OF THE BUILDING AND EVERY 75 FT TO D-BOX.
13. TANK SHALL BE A MINIMUM OF 10 FT FROM BUILDING.
14. TANK SHALL HAVE A LOCATION STAKE PLACED ABOVE OR NEXT TO TANK AFTER INSTALLATION AND BACK FILL.

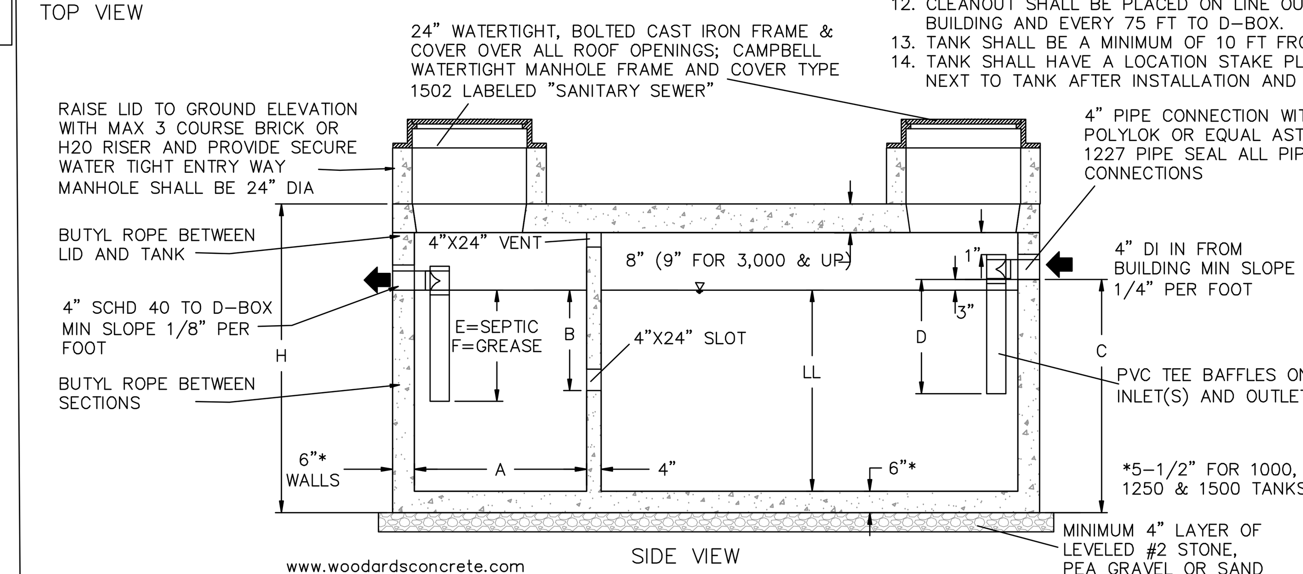


SPECIFICATIONS

CONCRETE MIN. STRENGTH: 4,000 PSI AT 28 DAYS
REINFORCEMENT: #4 & #5 REBAR/ASTM A615
AIR ENTRAINMENT: 6%
CONSTRUCTION JOINT: BUTYL RUBBER
SEALANT PIPE CONNECTION: POLYLOK SEAL OR ASTM C1644 CONNECTOR
LOAD RATING: HS20-44 + 30% /ASTM C857

**PRECAST TRAFFIC DUTY TANKS**
**750 TO 6,000 GALLONS**
**SEPTIC TANKS & GREASE TRAPS**

**Woodard's Concrete Products, Inc.**
629 Lybolt Road, Bullville, NY 10915
(845) 361-3471 / Fax 361-1050
Page 12A 7/8/14
REV BELS 3/23/15

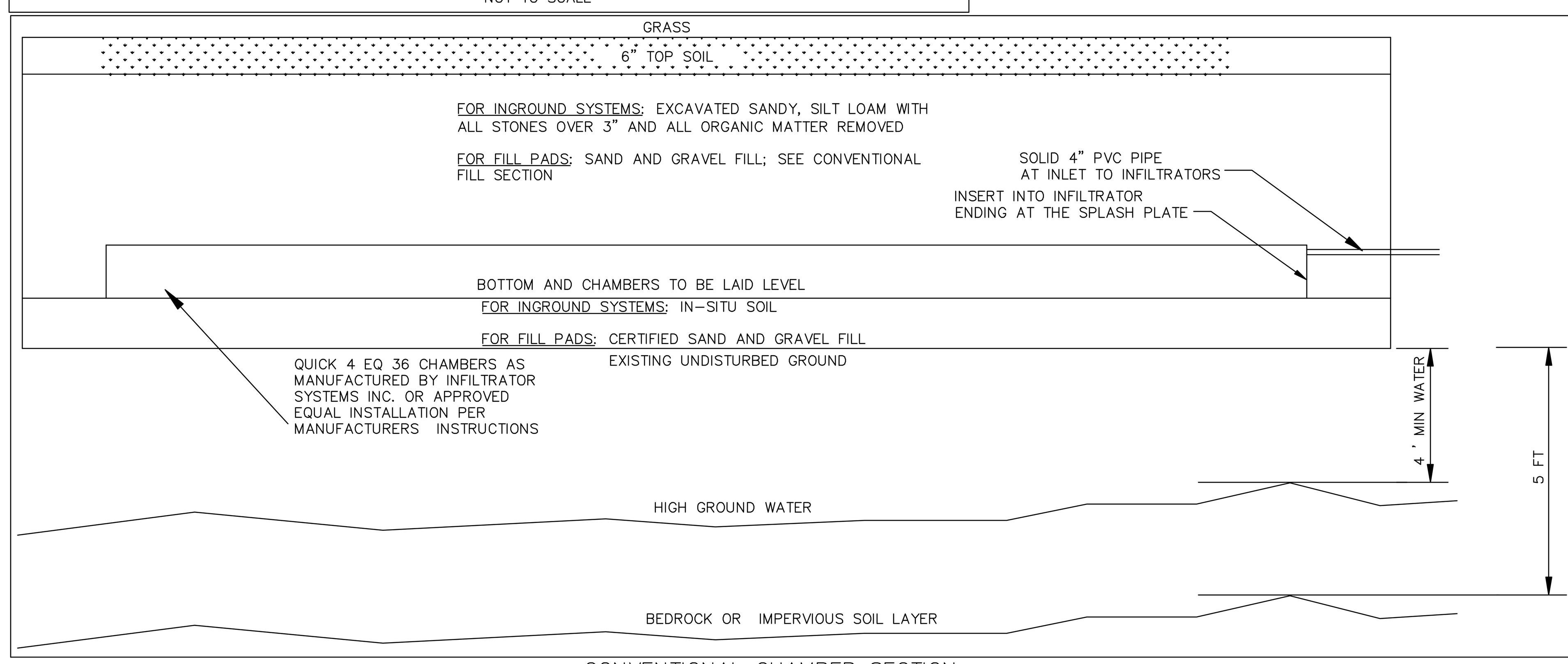


CONVENTIONAL CHAMBER SECTION
NOT TO SCALE

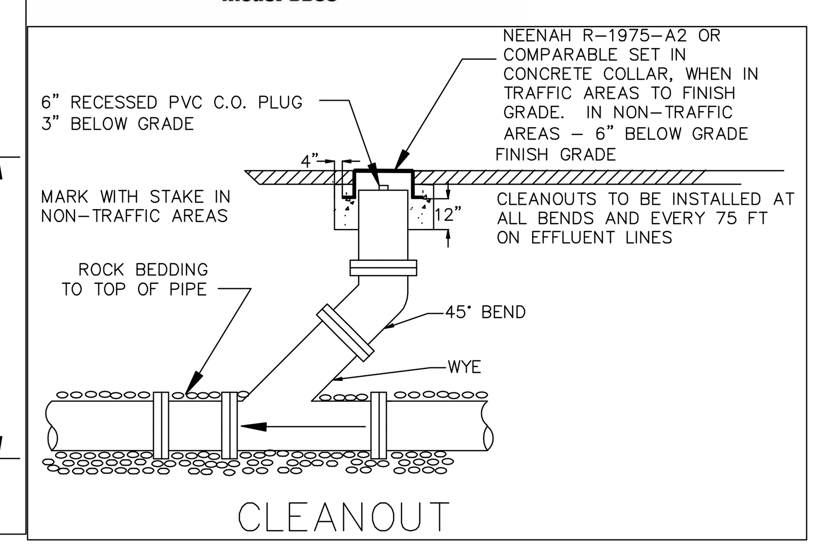


CLEANOUT

STANDARD NOTES FOR RESIDENTIAL PROJECTS (ONSITE SEWAGE DISPOSAL & CENTRAL WATER)

THE DESIGN, CONSTRUCTION AND INSTALLATION SHALL BE IN ACCORDANCE WITH THIS PLAN AND GENERALLY ACCEPTED STANDARDS IN EFFECT AT THE TIME OF CONSTRUCTION WHICH INCLUDE:

"APPENDIX 75-A, WASTE TREATMENT - INDIVIDUAL HOUSEHOLD SYSTEMS, NEW YORK STATE SANITARY CODE." "NEW YORK STATE DESIGN STANDARDS FOR INTERMEDIATE SIZED WASTEWATER TREATMENT SYSTEMS", NYSDEC
"RESIDENTIAL ONSITE WASTEWATER TREATMENT SYSTEMS, DESIGN HANDBOOK", NEW YORK STATE DEPARTMENT OF HEALTH.
"RECOMMENDED STANDARDS FOR WATER WORKS (TEN STATES)."
"PLANNING THE SUBDIVISION AS PART OF THE TOTAL ENVIRONMENT", NEW YORK STATE DEPARTMENT OF HEALTH.
"NEW YORK STATE DEPARTMENT OF HEALTH AND DUTCHESS COUNTY ENVIRONMENTAL HEALTH SERVICES DIVISION POLICIES, PROCEDURES AND STANDARDS."
"DUTCHESS COUNTY AND NEW YORK STATE SANITARY CODES."
"DUTCHESS COUNTY ENVIRONMENTAL HEALTH SERVICES DIVISION CERTIFICATE OF APPROVAL LETTER."

THIS PLAN IS APPROVED AS MEETING THE APPROPRIATE AND APPLIED TECHNICAL STANDARDS, GUIDELINES, POLICIES AND PROCEDURES FOR ARRANGEMENT OF SEWAGE DISPOSAL AND TREATMENT AND WATER SUPPLY FACILITIES; AND, AS A CONDITION OF THIS APPROVAL, A CONSTRUCTION INSPECTION BY A REPRESENTATIVE OF THE DC EHSD SHALL BE DONE TO DETERMINE THAT CONSTRUCTION AT THE TIME OF INSPECTION WAS COMPLETED IN GENERAL CONFORMANCE WITH THE APPROVED PLANS AND ANY AMENDMENT THEREOF.

UPON COMPLETION OF THE WATER SYSTEM FACILITIES, THE FINISHES WORKS SHALL BE INSPECTED, TESTED AND CERTIFIED COMPLETE TO THE DC EHSD BY THE NEW YORK STATE REGISTERED DESIGN PROFESSIONAL SUPERVISING CONSTRUCTON. NO PART OF THE FACILITIES SHALL BE PLACED INTO SERVICE UNTIL ACCEPTED BY THE DC EHSD.

APPROVAL OF ANY PLAN(S) OR AMENDMENT THERETO SHALL BE VALID FOR A PERIOD OF 5 YEARS FROM THE DATE OF APPROVAL. FOLLOWING THE EXPIRATION OF SAID APPROVAL, THE PLAN(S) SHALL BE RE-SUBMITTED TO THE COMMISSIONER OF HEALTH FOR CONSIDERATION FOR RE-APPROVAL. RE-SUBMISSION OR REVISED SUBMISSION OF PLANS AND/OR ASSOCIATED DOCUMENTS SHALL BE SUBJECT TO COMPLIANCE WITH THE TECHNICAL STANDARDS, GUIDELINES, POLICIES AND PROCEDURES IN EFFECT AT THE TIME OF THE RE-SUBMISSION.

THE DC EHSD SHALL BE CONTACTED PRIOR TO THE COMMENCEMENT OF THE HOME CONSTRUCTION AND/OR ISSUANCE OF A BUILDING PERMIT FOR A PRE-CONSTRUCTION INSPECTION TO ENSURE THAT THE ARRANGEMENTS FOR WATER SUPPLY AND SEWAGE DISPOSAL ARE COMMENCED IN ACCORDANCE WITH THE APPROVED PLANS AND AMENDMENTS THERETO AND GENERALLY ACCEPTED STANDARDS.

ALL WELLS AND ONSITE WASTEWATER TREATMENT SYSTEMS, EXISTING OR APPROVED, LOCATED WITHIN 300 FEET OF THE EXISTING WELLS AND PROPOSED ONSITE WASTEWATER TREATMENT SYSTEM ARE SHOWN ON THIS PLAN ALONG WITH ANY OTHER ENVIRONMENTAL HAZARDS IN THE AREA THAT MAY AFFECT THE DESIGN AND FUNCTIONAL ABILITY OF THE ONSITE
WASTEWATER TREATMENT SYSTEM AND WELL.

IF THE TANK IS DELIVERED TO THE SITE IN SECTIONS, THEN IT SHALL BE DEMONSTRATED BY THE CONTRACTOR TO THE DCEHSD FIELD INSPECTOR AND/OR DESIGN PROFESSIONAL THAT THE TANK IS SEALED, WATERTIGHT AND ACCEPTABLE FOR USE. THIS SHALL REQUIRE, AT A MINIMUM, THE FILLING OF THE TANK WITH WATER TO OBSERVE IF IT IS IN FACT SEALED, WATERTIGHT AND ACCEPTABLE FOR USE. THE TANK MUST ALSO MEET ANY LOCAL TESTING REQUIREMENTS, INCLUDING POSSIBLE ELECTRICAL AND SAFETY STANDARDS.

ALL PROPOSED SERVICE LINES ON THIS PLAN ARE ACCESSIBLE FOR INSTALLATION AND PLACEMENT.

NO CELLAR, FOOTING, FLOOR, GARAGE, COOLER OR ROOF DRAINS SHALL BE DISCHARGED INTO THE ONSITE WASTEWATER TREATMENT SYSTEM.

ALL BUILDINGS SHALL BE CONSTRUCTED AT AN ELEVATION HIGH ENOUGH TO ENSURE GRAVITY FLOW TO THE ONSITE WASTEWATER TREATMENT SYSTEM.

THERE SHALL BE NO VEHICULAR TRAFFIC OVER THE ONSITE WASTEWATER TREATMENT SYSTEM. PRIOR TO CONSTRUCTION, THE AREA OF THE SYSTEM SHALL BE STAKED OUT AND FENCED OFF.

ONSITE WASTEWATER TREATMENT SYSTEMS SHALL NOT BE INSTALLED IN WET OR FROZEN SOIL.

ALL REQUIRED EROSION & SEDIMENT CONTROL AND STORMWATER POLLUTION PREVENTION WATER QUALITY & QUANTITY CONTROL STRUCTURES, PERMANENT AND TEMPORARY, ARE SHOWN ON THE PLANS.

ALL SERVICE LINES ARE THE RESPONSIBILITY OF THE HOMEOWNER UP TO THE PROPERTY LINE. THE WATER COMPANY SHALL BE RESPONSIBLE FOR ALL VALVES AND PIPES WHICH ARE NOT ON THE HOMEOWNER'S PROPERTY.

NO BUILDINGS ARE TO BE OCCUPIED AND THE NEW WATER SYSTEM SHALL NOT BE PLACED INTO SERVICE, UNTIL A "COMPLETED WORKS APPROVAL" IS ISSUED UNDER SECTION 5-1.22(D) OF PART 5 OF THE NEW YORK STATE SANITARY CODE (10NYCRR5).

THE OWNERS OF THE PROPERTY HEREON STATE THAT THEY ARE FAMILIAR WITH THIS MAP, ITS CONTENTS AND ITS LEGENDS AND HEREBY CONSENT TO ALL SAID TERMS AND CONDITIONS AS STATED HEREON. *SEE OWNER CERTIFICATION BLOCK.*

GENERAL NOTES:

1. ANY MODIFICATION OR DEVIATION FROM THIS PLAN MUST BE APPROVED BY THE DESIGN ENGINEER AND THE DCDOBCH (DUTCHESS COUNTY DEPARTMENT OF BEHAVIORAL AND COMMUNITY HEALTH) PRIOR TO CONSTRUCTION OR ANY MODIFICATION OR DEVIATION BEING PERFORMED.
2. A NEW YORK STATE LAND SURVEYOR SHALL STAKE OUT THE PROPERTY LINES WHEN THE TOE OF SLOPE OF FILL IS ANTICIPATED TO BE WITHIN 10 FEET OF THE PROPERTY LINE
3. CONTRACTOR SHALL CONTACT UFPO (DIG SAFELY NEW YORK) TO MARK UNDER GROUND UTILITIES AT LEAST TWO FULL WORKING DAYS BEFORE ANY SITE WORK IS STARTED. UFPO (DIG SAFELY) CAN BE CONTACTED AT 1-800-962-7962 OR 811 OR www.digsafelynewyork.com
4. THE DCDOBCH AND THE ENGINEER SHALL BE NOTIFIED 72 HOURS PRIOR TO PLACING FILL
5. INSTALL EROSION CONTROL PRACTICES PRIOR TO STARTING WORK.
6. ALL TREES SHALL BE REMOVED FROM THE FIELD AREA PRIOR TO CONSTRUCTION. CHECK IF THERE ARE ANY TREE CUTTING RESTRICTON DATES ON THE PROJECT PRIOR TO SCHEDULING CUTTING.
7. THERE SHALL BE NO REGRADING IN THE TILE FIELD AREA UNLESS OTHERWISE SHOWN ON THE PLAN.
8. NO SDS SHALL BE PLACED WITHIN 35 FEET OF A STORM DRAIN PIPE OR RAIN GARDEN, 50 FEET FROM TOP OF STEEP SLOPE OR WITHIN 100 FEET OF ANY POND, LAKE, WATER COURSE OR WETLAND UNLESS WAIVERS HAVE BEEN GRANTED.
9. SDS SHALL NOT BE INSTALLED IN WET OR FROZEN SOILS
10. NO LATERALS PERMITTED UNDER DRIVEWAY OR PAVED AREAS UNLESS WAIVERS HAVE BEEN GRANTED.
11. ALL LATERALS SHALL BE OF EQUAL LENGTH AND PLACED PARALLEL WITH THE CONTOURS.
12. INSTALL END CAPS AT THE END OF ALL LATERALS.
13. IF AND WHEN IT BECOMES NECESSARY TO UTILIZE THE EXPANSION SYSTEM, THE CHAMBERS AND PIPING MUST BE INSTALLED EXACTLY AS SHOWN ON THE APPROVED PLANS.
14. NO CELLAR, FOOTING OR ROOF DRAINS SHALL BE DISCHARGED INTO THE SDS.

MINIMUM INSPECTIONS REQUIRED:

1. A NYS LICENSED PROFESSION ENGINEER MUST CERTIFY FILL PADS TO THE DC EHSD PRIOR THE THE DCDOBCH PROVIDING PERMISSION TO OPERATE OR COMPLETED WORKS.
2. INSPECTIONS BY THE CERTIFYING ENGINEER AND DC SANITARIAN ARE REQUIRED FOR THE CERTIFICATION.
3. IT IS THE CONTRACTORS RESPONSIBILITY TO PROVIDE CERTIFYING ENGINEER AND DCDOBCH INSPECTOR ADEQUATE NOTIFICATION AND ALLOW ADEQUATE TIME FOR INSPECTIONS TO BE PLACED IN ENGINEER'S WORK SCHEDULE.
4. COSTS AND WORK TIME LOSS, BY FAILURE BY THE CONTRACTOR TO PROVIDE ADEQUATE NOTIFICATIONS AND TIME IN SCHEDULE, SHALL BE THE RESPONSIBILITY OF THE CONTRACTOR.
5. CONTRACTOR SHALL BE RESPONSIBLE FOR COST OF MATERIALS AND ENGINEERS' TIME FOR ANY RETESTING OR REINSPECTION OF INADEQUATE WORK.
6. CONTRACTOR SHALL PROVIDE ENGINEER WITH APPROXIMATE WORK SCHEDULE 14 DAYS PRIOR TO PLACING FILL.
7. CONTRACTOR SHALL NOTIFY ENGINEER AND DCDOBCH SANITARIAN 72 PRIOR TO STARTING WORK OR REQUIRED INSPECTIONS.
8. NO FILL SHALL OCCUR ON WEEKENDS OR HOLIDAYS WITHOUT PRIOR WRITTEN APPROVAL BY ENGINEER.
9. CONTRACTOR SHALL NOTIFY ENGINEER BY 7 AM IF NOT WORKING ON A PREVIOUSLY PLANNED WORK DAY OR CHANGE IN SCHEDULE.
10. THE FOLLOWING ARE THE MINIMUM INSPECTIONS REQUIRED BY THE CERTIFYING ENGINEER FOR CERTIFICATION (ADDITIONAL INSPECTIONS MAY BE REQUIRED AS ORDERED BY ENGINEER OR DCDOBCH):
   A. AFTER STAKE OUT BY NYS LICENSED LAND SURVEYOR AND INSTALLATION OF SILT FENCE PRIOR TO ANY OTHER WORK.
   B. INSPECTION OF PROPOSED FILL PAD AREA.
   C. PLACEMENT OF FILL.
   D. PERCOLATION TESTING AND CERTIFICATION OF FILL.
   E. ANY ADDITIONAL INSPECTIONS AS ORDERED BY ENGINEER AND DCDOBCH PRIOR TO CONSTRUCTION.


**BERGER ENGINEERING AND SURVEYING**
100 FULTON AVE.
POUGHKEEPSIE N.Y. 12603
(845) 471 - 7383
bergereng@gmail.com



UNAUTHORIZED ALTERATION OR ADDITION TO A SURVEY MAP BEARING A LICENSED LAND SURVEYOR'S SEAL OR A PLAN BEARING A PROFESSIONAL ENGINEER'S SEAL IS A VIOLATION OF SECTION 7209, SUB-DIVISION 2, OF THE NEW YORK STATE EDUCATION LAW.


STATE OF NEW YORK · JOSEPH PAUL BERGER · No. 069554 · LICENSED PROFESSIONAL ENGINEER

**MYERS RUN**
**MYERS CORNERS ROAD**
**TOWN OF WAPPINGER NY**

**DETAILS FOR OWTS**

| No. | DATE | REVISIONS | BY |
|---|---|---|---|
| 1 | 05/03/21 | revised drawings | JPB |

Date: 01/5/21
Sheet: sh 5 of 10