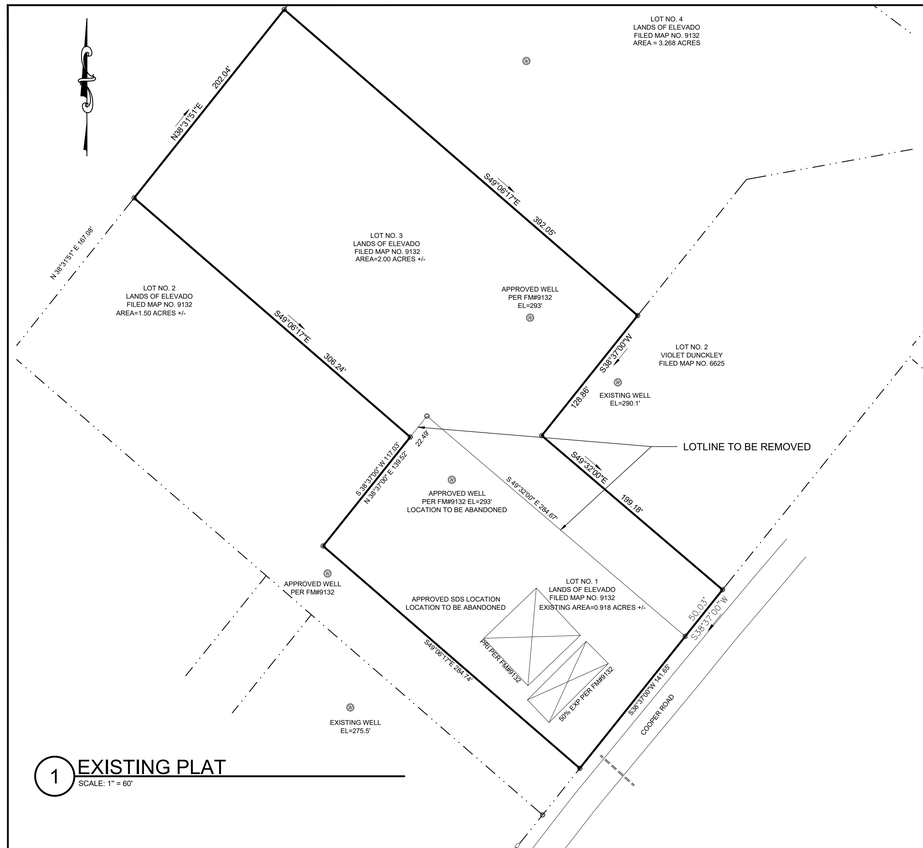

1 EXISTING PLAT
SCALE: 1" = 60'

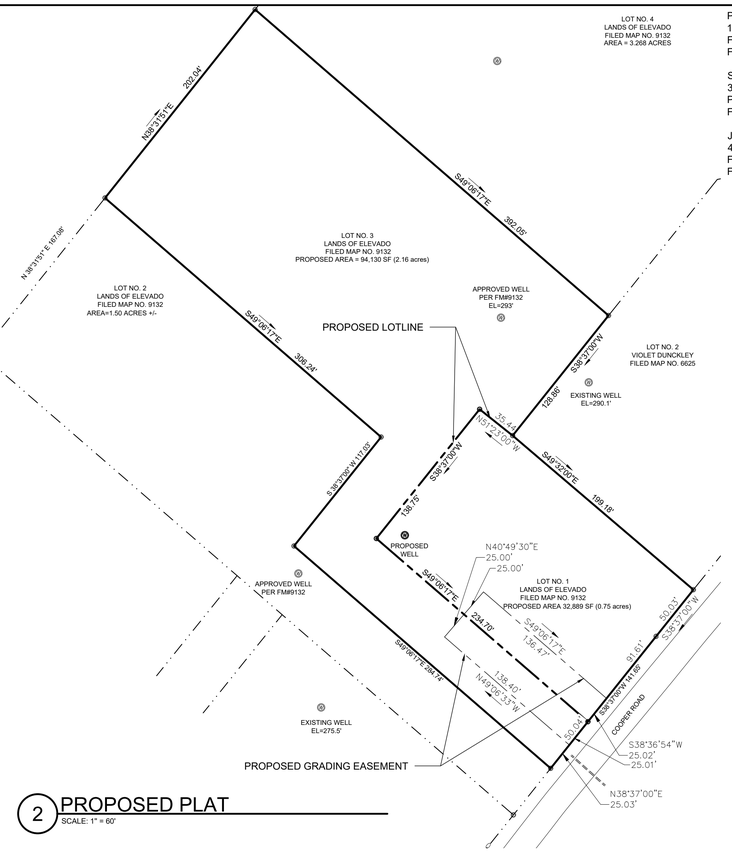

2 PROPOSED PLAT
SCALE: 1" = 60'

Paul H. Dickerman
131 Cooper Rd
Fishkill, NY 12524
For Property:1356890061560002898828

Sigma LLC
312 Titusville Rd Ste B
Poughkeepsie, NY 12603
For Property:1356890061560002826836

Joseph D'Amelia, Jr
45 Addison Rd
Fishkill, NY 12524
For Property:1356890061560002920781

Inspire of Morningside
946 McDonald Ave
Brooklyn, NY 11217
For Property:1356890061560002852826, 849810, 869803, 2872849

Daniel J. Silvestri, Jr
173 Old Route 9 Ste 1
Fishkill, NY 12524
For Property:1356890061560002845873

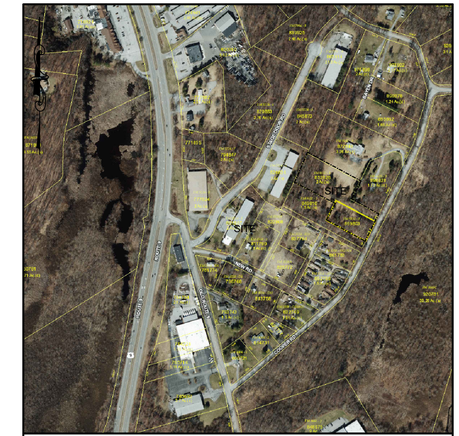

AREA MAP
SCALE: 1" = 400'

Profile View: PROFILE LOT 1 DW ALIGNMENT
Alignment Name: LOT 1 DW
Horizontal Scale: 1"=60'
Vertical Scale: 1"=12'

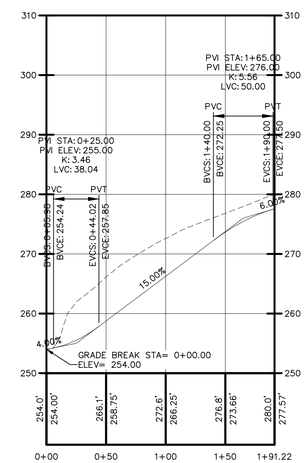

Zone Classification R-20
Use Residential
Tax Map Parcel No 135689-6156-02-869803 - Lot #1 - FILED MAP 9132
135689-6156-02-852826 - Lot #3 - FILED MAP 9132
Topographic Datum USGS
Total Existing Acreage: Lot #1 - 0.918 AC
Lot #3 - 2.00 AC
Water Supply: Individual Well
Sewage Disposal: Individual Subsurface Disposal

GENERAL LEGEND

- EXISTING/APPROVED SEWAGE DISPOSAL SYSTEM (SDS)
- ST — SEPTIC TANK
- DROP BOX PRIMARY OWTS EXPANSION
- REPLACEMENT OWTS AREA
- FD — RL — FOOTING DRAIN ROOF LEADER
- 325 — REGRADED CONTOUR
- LIMIT OF DISTURBANCE
- PT# — TP# — PERCOLATION TEST LOCATION
- DEEP SOIL TEST LOCATION
- PROPOSED SILT FENCE
- CONSTRUCTION ENTRANCE
- TEMPORARY SOIL STOCKPILE WITH SILT FENCING EROSION CONTROL
- CWA — CONCRETE WASHOUT AREA

BULK REGULATIONS

SINGLE FAMILY RESIDENTIAL (R-20)	Required	Lot 1	Lot 3
Minimum Lot Area (Square feet) 20,000	20,000	32,889 (0.75 acres)	94,130 (2.16 acres)
Minimum Lot Frontage (feet)	50	141.64	50.04
Minimum Lot Width (feet)	100	141	161
Minimum Front Yard (feet)	35	140	43
Minimum Side Yard (feet)	20	28	61
Minimum Rear Yard (feet)	40	42	261
Maximum Building Coverage (%)	15	9	3
Maximum Height	35' or 2.5 Stories	2.5 Stories	2.5 Stories
Maximum floor area ratio	0.15	0.09	0.03

RECOMMENDED FOR APPROVAL

DC EHSD APPROVED

DATE: _____

PROJECT: _____

SUPERVISING PUBLIC HEALTH ENGINEER

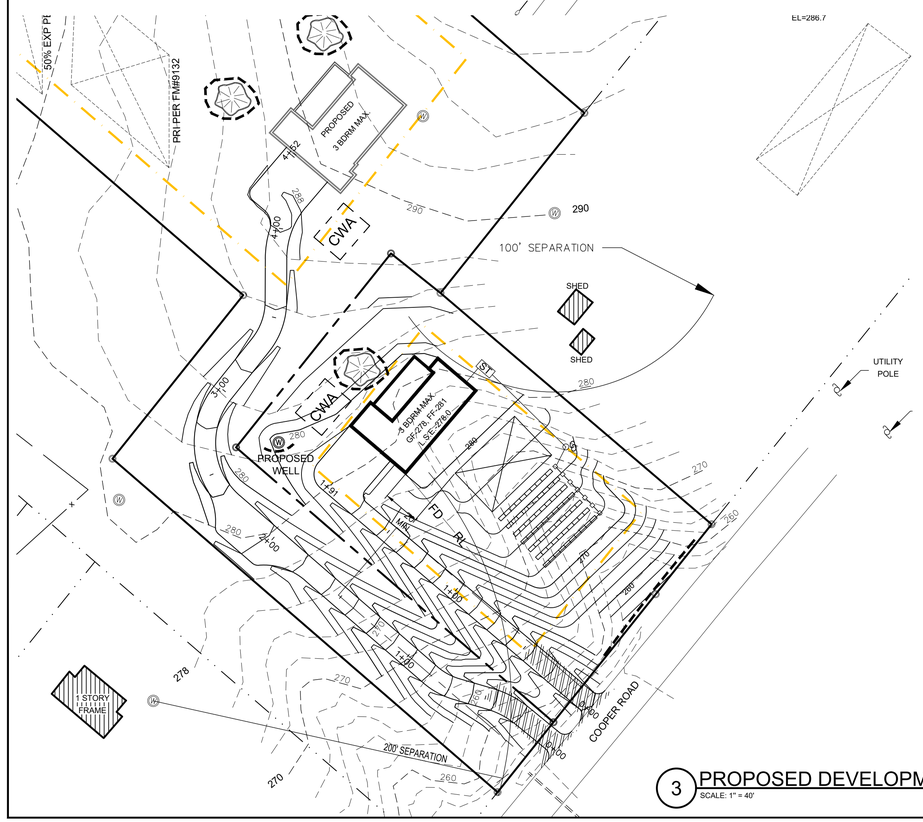

3 PROPOSED DEVELOPMENT PLAN
SCALE: 1" = 40'

Profile View: LOT 3 DRIVE
Alignment Name: LOT 3 DW
Horizontal Scale: 1"=60'
Vertical Scale: 1"=12'

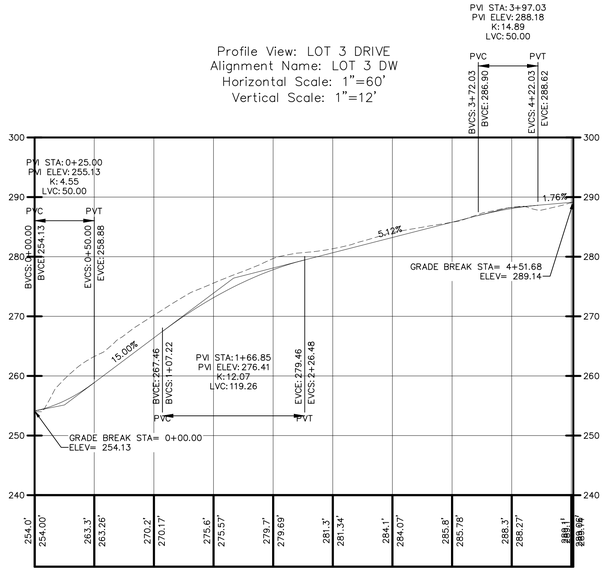

IT IS A VIOLATION OF NEW YORK STATE EDUCATION LAW FOR ANY PERSONS TO ALTER THESE PLANS, SPECIFICATIONS, OR REPORTS IN ANY WAY, UNLESS ACTING UNDER THE DIRECTION OF A LICENSED PROFESSIONAL ENGINEER OR LAND SURVEYOR.

Town of Wappinger Planning Board

APPROVED BY RESOLUTION OF THE PLANNING BOARD OF THE TOWN OF WAPPINGER, NEW YORK ON THE _____ DAY

OF_____, 202 SUBJECT TO ALL REQUIREMENTS AND CONDITIONS OF SAID RESOLUTION. ANY CHANGE, ERASURE,

MODIFICATION OR REVISION OF THIS PLAN, AS APPROVED SHALL VOID THIS APPROVAL.

TOWN OF WAPPINGER PLANNING BOARD

SIGNED THIS_____ DAY OF _____, 202

TOWN OF WAPPINGER PLANNING BOARD CHAIR

Owner's Consent Note

THE UNDERSIGNED OWNER OF THIS PROPERTY HEREON STATES THAT HE IS FAMILIAR WITH THIS MAP, ITS CONTENTS AND ITS LEGENDS AND HEREBY CONSENTS TO ALL SAID TERMS AND CONDITIONS AS STATED HEREON

OWNER DATE

Owner/Applicant

Mid-Hudson Development
982 NY-82,
Hopewell Junction, NY 12533

Revisions

Brian J. Stokosa, PE

STATE OF NEW YORK · BRIAN J. STOKOSA · 083970 · LICENSED PROFESSIONAL ENGINEER

Project No. 2021:441 License No. 083970

DAY | STOKOSA ENGINEERING P.C.

3 Van Wyck Lane
Wappingers Falls, New York 12590
(845)-223-3202

PROJECT
MID HUDSON DEVELOPMENT
Town of Wappinger Dutchess County, New York

DRAWING
LOT LINE REALIGNMENT
FILED MAP 9132 LOTS 1 & 3

SCALE	DRAWN BY	DRAWING No.
AS NOTED	ALB	1
DATE 01-11-22	CHECKED BY BJS	1 of 2

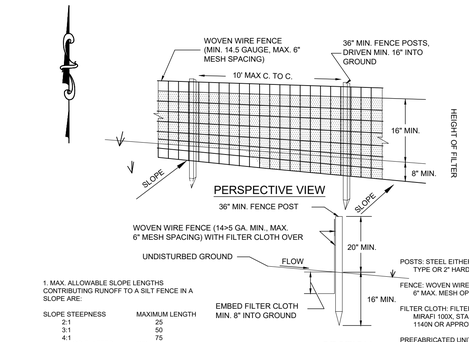

1. MAX. ALLOWABLE SLOPE LENGTHS CONTRIBUTING RUNOFF TO A SILT FENCE IN A SLOPE ARE:

SLOPE STEEPNESS	MAXIMUM LENGTH
2:1	25
3:1	50
4:1	75
5:1 OR FLATTER	100

2. MAX. DRAINAGE AREA FOR OVERLAND FLOW TO A SILT FENCE SHALL NOT EXCEED 1 ACRE PER 100' OF FENCE, WITH MAXIMUM PONDING DEPTH OF 1.5' BEHIND THE FENCE.

CONSTRUCTION SPECIFICATIONS

1) WOVEN WIRE FENCE TO BE FASTENED SECURELY TO FENCE POSTS WITH WIRE TIES OR STAPLES. POSTS SHALL BE STEEL EITHER T OR U TYPE OR HARDWOOD.
2) FILTER CLOTH TO BE FASTENED SECURELY TO WOVEN WIRE FENCE WITH TIES SPACED EVERY 24" AT TOP AND MID SECTION.
3) WHEN TWO SECTIONS OF FILTER CLOTH ADJOIN EACH OTHER THEY SHALL BE OVERLAPPED BY SIX INCHES AND FOLDED.
4) PREFABRICATED UNITS SHALL BE GEOFAB, ENVIROFENCE, OR APPROVED EQUIVALENT.
5) MAINTENANCE SHALL BE PERFORMED AS NEEDED AND MATERIAL REMOVED WHEN "BULGES" DEVELOP IN THE SILT FENCE.

SILT FENCING PLAN

NOT TO SCALE

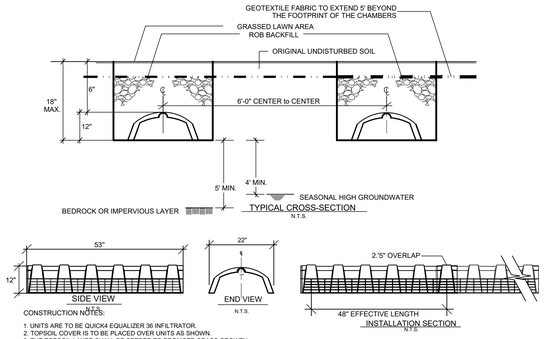

CONSTRUCTION NOTES:

1. UNITS ARE TO BE QUICK4 EQUALIZER 36 INFILTRATOR.
2. TOPSOIL COVER IS TO BE PLACED OVER UNITS AS SHOWN.
3. THE TOPSOIL LAYER SHALL BE SEEDED TO PROMOTE GRASS GROWTH.
4. UNITS TO BE SUPPLIED BY INFILTRATOR SYSTEMS INC., 6 OLD BUSINESS PARK ROAD, OLD SAYBROOK C.T. 06475.
5. UNITS TO BE INSTALLED AS PER MANUFACTURER'S SPECIFICATIONS.
6. MANUFACTURE WEB SITE - HTTP://WWW.INFILTRATORSYSTEMS.COM
7. CHANGES IN INFILTRATOR MODEL, MANUFACTURE, AND MANUFACTURE INSTALLATION REQUIREMENTS WILL REQUIRE RE-APPROVAL FROM THE DCHD.
8. INFILTRATORS ARE TO BE SET LEVEL.
9. A SPLASH PAD TO BE PROVIDED IN ACCORDANCE WITH MANUFACURES SPECIFICATIONS

TYPICAL INFILTRATOR DETAIL

NOT TO SCALE

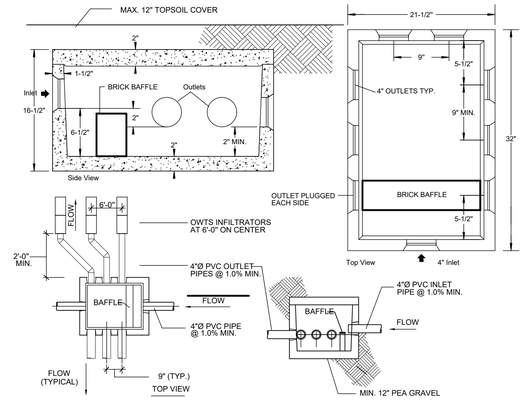

TYPICAL DISTRIBUTION BOX DETAIL

NOT TO SCALE

CONSTRUCTION NOTES:

1. A MINIMUM OF 2' OF 4"Ø SOLID PIPE SHALL BE PROVIDED PRIOR TO THE START OF THE TRENCHES.
2. ALL OUTLETS FROM THE DISTRIBUTION BOX SHALL BE AT THE SAME LEVEL TO INSURE THE EVEN DISTRIBUTION OF FLOW.
3. ALL UNUSED OUTLETS MUST BE PLUGGED.
4. A BRICK BAFFLE SHALL BE PLACE AT THE INLET OPENING OF THE D-BOX.
5. A BEDDING OF 12" OF PEA GRAVEL SHALL BE PROVIDED UNDER THE D-BOX.
6. THE INVERT ON THE INLET PIPE SHALL BE A MINIMUM OF 2" HIGHER THAN THE INVERT OF ANY OF THE OUTLETS.
7. A MAX. 12" OF TOPSOIL COVER SHALL BE PROVIDED. WHERE, DUE TO SITE CONDITIONS, A DISTRIBUTION BOX MUST BE GREATER THAN 12 INCHES BELOW THE SURFACE, AN EXTENSION COLLAR SHALL BE INSTALLED TO WITHIN 12 INCHES OF THE SURFACE.
8. DISTRIBUTION BOXES MAY BE CONSTRUCTED IN PLACE OR PURCHASED PREFABRICATED. WHEN CONCRETE IS USED TO CONSTRUCT BOXES, IT SHALL HAVE A MINIMUM COMPRESSIVE STRENGTH OF 2,500 PSI AT 28 DAY SET.
9. PREFABRICATED BOXES MAY BE CONSTRUCTED OF CONCRETE, FIBERGLASS, OR PLASTIC. THE BOXES SHALL BE INSTALLED IN CONFORMANCE WITH THE MANUFACTURER'S INSTRUCTIONS IN ADDITION TO THE REQUIREMENTS ABOVE.
10. BENDS NOT TO EXCEED 45 DEGREES ARE PERMITTED IN THE LINE FROM THE SEPTIC TANK TO THE DISTRIBUTION DEVICE, PROVIDED EACH BEND HAS A CLEANOUT.
11. SPEED LEVELERS SHALL BE PROVIDED IN DISTRIBUTION BOX.

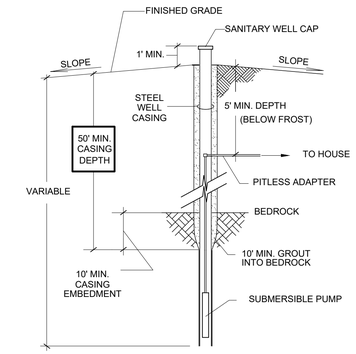

TYPICAL WELL DETAIL

SCALE: NOT TO SCALE

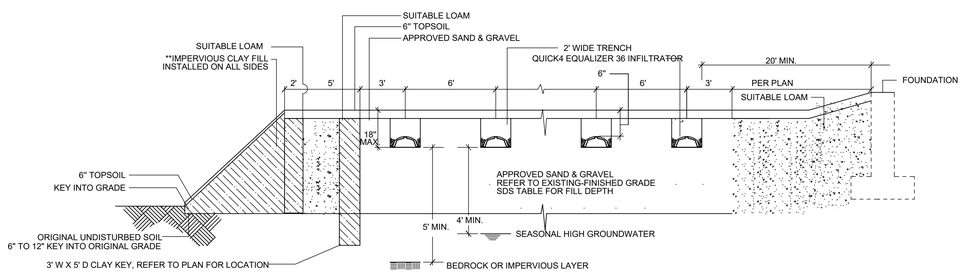

CONSTRUCTION NOTES:

1) FILL SHALL BE SAND AND GRAVEL FILL, WITH A STABILIZED PERCOLATION RATE WHICH IS LESS THAN OR EQUIVALENT TO THE PERCOLATION RATE OF THE VIRGIN SOIL, AND NO MORE 10 MINUTES PER INCH. THE DESIGN ENGINEER SHALL CERTIFY IN WRITING THAT THE FILL MATERIAL IS IN THE PROPER PLACE, IS OF THE PROPER QUANTITY AND DIMENSIONS, AND IS OF PROPER QUALITY. PROPER QUALITY MUST BE DEMONSTRATED BY STABILIZED PERCOLATION TESTS, THE RESULTS OF WHICH SHALL BE SUBMITTED WITH THE ENGINEER'S CERTIFICATION.
2) LATERALS TO BE PLACED 6' ON CENTERS WITH THE LIMITS OF THE GRAVEL 3' BEYOND THE CENTER OF THE TRENCH.
3) THE CLAY FILL TO BE OF AN IMPERVIOUS NATURE AND PLACED BEYOND THE LIMITS OF GRAVEL.
4) INFILTRATORS TO BE SET LEVEL.
5) THE SYSTEM SHALL NOT BE INSTALLED IN WET OR FROZEN SOIL.
6) A NYSPE SHALL CERTIFY THE INSTALLATION OF THE CLAY KEY TO THE DCHD.
7) THE PROPERTY LINE IN THE VICINITY OF THE SDS SHALL BE STAKED OUT PRIOR TO INSTALLATION OF THE SDS AND APPURTENANCES.

TYPICAL FILLPAD DETAIL

NOT TO SCALE

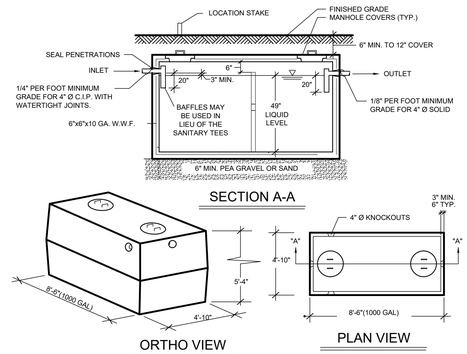

CONSTRUCTION NOTES:

1) THE CONTRACTOR SHALL SEAL PENETRATIONS IN THE SEPTIC TANK SO THAT THE SEPTIC TANK IS WATERTIGHT.
2) THE SEPTIC TANK SHALL BE CONSTRUCTED FROM CONCRETE WHICH SHALL HAVE A MINIMUM COMPRESSIVE STRENGTH OF 5000 PSI AT A STANDARD 28 DAY COMPRESSIVE TEST.
3) 6"x6"x10 GA. WELDED WIRE FABRIC SHALL BE USED AS REINFORCEMENT FOR THE SEPTIC TANK.
4) TWO-PIECE SEPTIC TANKS SHALL BE SEALED WITH A BUTYL GASKET OR AS PER THE MANUFACTURER'S RECOMMENDATIONS.
5) THE SEPTIC TANK SHALL BE TESTED FOR WATER TIGHTNESS.

TYPICAL SEPTIC TANK DETAIL

SCALE: NOT TO SCALE

DC EHSD - STANDARD NOTES FOR RESIDENTIAL PROJECTS

THE DESIGN, CONSTRUCTION AND INSTALLATION SHALL BE IN ACCORDANCE WITH THIS PLAN AND GENERALLY ACCEPTED STANDARDS IN EFFECT AT THE TIME OF CONSTRUCTION WHICH INCLUDE:

"APPENDIX 75-A, WASTE TREATMENT - INDIVIDUAL HOUSEHOLD SYSTEMS, NEW YORK STATE SANITARY CODE."
"NEW YORK STATE DESIGN STANDARDS FOR INTERMEDIATE SIZED WASTEWATER TREATMENT SYSTEMS", NYSDEC
"RESIDENTIAL ONSITE WASTEWATER TREATMENT SYSTEMS, DESIGN HANDBOOK", NEW YORK STATE DEPARTMENT OF HEALTH.
"PLANNING THE SUBDIVISION AS PART OF THE TOTAL ENVIRONMENT", NEW YORK STATE DEPARTMENT OF HEALTH.
"NEW YORK STATE DEPARTMENT OF HEALTH AND DUTCHESS COUNTY ENVIRONMENTAL HEALTH SERVICES DIVISION POLICIES, PROCEDURES AND STANDARDS."
"DUTCHESS COUNTY AND NEW YORK STATE SANITARY CODES."
"DUTCHESS COUNTY ENVIRONMENTAL HEALTH SERVICES DIVISION CERTIFICATE OF APPROVAL LETTER."

THIS PLAN IS APPROVED AS MEETING THE APPROPRIATE AND APPLIED TECHNICAL STANDARDS, GUIDELINES, POLICIES AND PROCEDURES FOR ARRANGEMENT OF WATER SUPPLY AND SEWAGE DISPOSAL AND TREATMENT FACILITIES; AND, AS A CONDITION OF THIS APPROVAL, A CONSTRUCTION INSPECTION BY A REPRESENTATIVE OF THE DC EHSD SHALL BE DONE TO DETERMINE THAT CONSTRUCTION AT THE TIME OF INSPECTION WAS COMPLETED IN GENERAL CONFORMANCE WITH THE APPROVED PLANS AND ANY AMENDMENT THEREOF.

APPROVAL OF ANY PLAN(S) OR AMENDMENT THERETO SHALL BE VALID FOR A PERIOD OF 5 YEARS FROM THE DATE OF APPROVAL. FOLLOWING THE EXPIRATION OF SAID APPROVAL, THE PLAN(S) SHALL BE RE-SUBMITTED TO THE COMMISSIONER OF HEALTH FOR CONSIDERATION FOR RE-APPROVAL. RE-SUBMISSION OR REVISED SUBMISSION OF PLANS AND/OR ASSOCIATED DOCUMENTS SHALL BE SUBJECT TO COMPLIANCE WITH THE TECHNICAL STANDARDS, GUIDELINES, POLICIES AND PROCEDURES IN EFFECT AT THE TIME OF THE RE-SUBMISSION.

THE DC EHSD SHALL BE CONTACTED PRIOR TO THE COMMENCEMENT OF THE HOME CONSTRUCTION AND/OR ISSUANCE OF A BUILDING PERMIT FOR A PRE-CONSTRUCTION INSPECTION TO ENSURE THAT THE ARRANGEMENTS FOR WATER SUPPLY AND SEWAGE DISPOSAL ARE COMMENCED IN ACCORDANCE WITH THE APPROVED PLANS AND AMENDMENTS THERETO AND GENERALLY ACCEPTED STANDARDS.

ALL WELLS AND ONSITE WASTEWATER TREATMENT SYSTEMS, EXISTING OR APPROVED, LOCATED WITHIN 300 FEET OF THE PROPOSED WELL ONSITE WASTEWATER TREATMENT SYSTEM ARE SHOWN ON THIS PLAN ALONG WITH ANY OTHER ENVIRONMENTAL HAZARDS IN THE AREA THAT MAY AFFECT THE DESIGN AND FUNCTIONAL ABILITY OF THE ONSITE WASTEWATER TREATMENT SYSTEM AND WELL.

IF THE TANK IS DELIVERED TO THE SITE IN SECTIONS, THEN IT SHALL BE DEMONSTRATED BY THE CONTRACTOR TO THE DC EHSD FIELD INSPECTOR AND/OR DESIGN PROFESSIONAL THAT THE TANK IS SEALED, WATERTIGHT AND ACCEPTABLE FOR USE. THIS SHALL REQUIRE, AT A MINIMUM, THE FILLING OF THE TANK WITH WATER TO OBSERVE IF IT IS IN FACT SEALED, WATERTIGHT AND ACCEPTABLE FOR USE. THE TANK MUST ALSO MEET ANY LOCAL TESTING REQUIREMENTS, INCLUDING POSSIBLE ELECTRICAL AND SAFETY STANDARDS.

NO CELLAR, FOOTING, FLOOR, GARAGE, COOLER OR ROOF DRAINS SHALL BE DISCHARGED INTO THE ONSITE WASTEWATER TREATMENT SYSTEM OR WITHIN 50 FEET OF ANY WELL.

ALL BUILDINGS SHALL BE CONSTRUCTED AT AN ELEVATION HIGH ENOUGH TO ENSURE GRAVITY FLOW TO THE ONSITE WASTEWATER TREATMENT SYSTEM.

THERE SHALL BE NO VEHICULAR TRAFFIC OVER THE ONSITE WASTEWATER TREATMENT SYSTEM. PRIOR TO CONSTRUCTION, THE AREA OF THE SYSTEM SHALL BE STAKED OUT AND FENCED OFF.

ONSITE WASTEWATER TREATMENT SYSTEMS SHALL NOT BE INSTALLED IN WET OR FROZEN SOIL.

ALL REQUIRED EROSION & SEDIMENT CONTROL AND STORMWATER POLLUTION PREVENTION WATER QUALITY & QUANTITY CONTROL STRUCTURES, PERMANENT AND TEMPORARY, ARE SHOWN ON THE PLANS.

ALL PROPOSED WELLS AND SERVICE LINES ON THIS PLAN ARE ACCESSIBLE FOR INSTALLATION AND PLACEMENT.

IT IS A VIOLATION OF NEW YORK STATE EDUCATION LAW FOR ANY PERSONS TO ALTER THESE PLANS, SPECIFICATIONS, OR REPORTS IN ANY WAY, UNLESS ACTING UNDER THE DIRECTION OF A LICENSED PROFESSIONAL ENGINEER OR LAND SURVEYOR.

PERCOLATION TEST DATA

SYMBOL ~ PT

PERCOLATION TESTS HOLES (1+2) WERE PERFORMED ON THE DATE OF OCTOBER 12, 2021. PERCOLATION HOLES WERE PRE-DUG AND SOAKED 24 HOURS PRIOR TO TESTING.

T.H. NO.	DEPTH	PERCOLATION TEST RUN(S) 1	2	3	4	5	DESIGN RATE IMPLEMENTED
1	29"	21	25	34	43	43	46-60 DESIGN RATE
2	29"	30	37	40	46	46	

DEEP TEST SOIL DATA

SYMBOL ~ TP

DEEPS TEST PERFORMED ON OCTOBER 12, 2021 BY THE OFFICE OF DAY & STOKOSA ENGINEERING P.C. & DAN KEELER OF THE DCHD.

TEST HOLE	DEPTH	ROCK	IMP.	WATER	RESULTS
1	7'-0"	---	---	3'-0" SEEPAGE	6" TOPSOIL, BAL. - SILTY CLAY LOAM
2	7-0"	---	---	2'-0" SEEPAGE	6" TOPSOIL, BAL. - SILTY CLAY LOAM

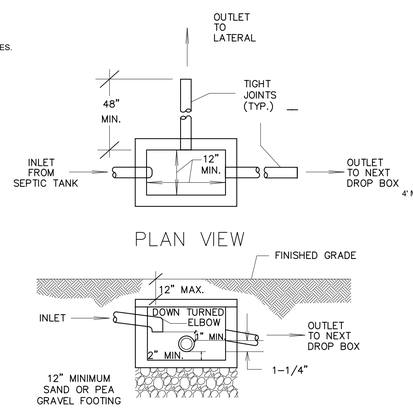

NOTES

A MINIMUM OF 4' OF 4"ø SOLID PIPE SHALL BE PROVIDED PRIOR TO THE START OF THE TRENCHES.

INVERT ON THE INLET PIPE IS TO BE A MINIMUM OF 2" HIGHER THAT THE INVERT OF ANY OUTLET PIPE.

ALL DROP BOXES ARE TO HAVE REMOVABLE COVERS.

TYPICAL DROP BOX DETAIL

SCALE: NOT TO SCALE

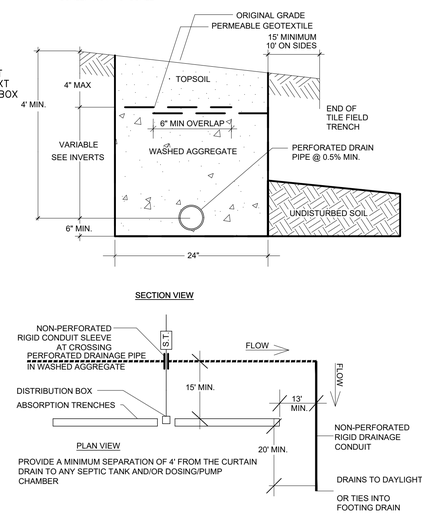

PROVIDE A MINIMUM SEPARATION OF 4' FROM THE CURTAIN DRAIN TO ANY SEPTIC TANK AND/OR DOSING/PUMP CHAMBER

TYPICAL CURTAIN DRAIN

SCALE: NOT TO SCALE

TILE FIELD SCHEDULE

LINEAL FT. OF ABSORPTION AREA INFILTRATOR 3 BDRM DESIGN - 276 L.F. REQ. PRIMARY AREA	REPLACEMENT AREA	SAND & GRAVEL FILL (MINIMUM)	TOPSOIL COVER	TRENCH DEPTH (MAXIMUM)	TRENCH WIDTH	PUMP CHAMBER	DROP BOX	ONSITE WASTEWATER TREATMENT SYSTEM	SEPTIC TANK SIZE (GAL.) 3 BDRM MAX.	FIELD CONFIGURATION 3 BDRM MAX. 330 GPD PRIMARY AREA	REPLACEMENT AREA	L.S.E. MIN. INV.
280 L.F.	276 L.F.	2'0"	6"	18"	24"	NO	PRIMARY	INFILTRATOR	1,000	7 @ 40 EA. - 280 LF	6 @ 46 EA. - 276 LF	280.0

Owner's Consent Note

THE UNDERSIGNED OWNER OF THIS PROPERTY HEREON STATES THAT HE IS FAMILIAR WITH THIS MAP, ITS CONTENTS AND ITS LEGENDS AND HEREBY CONSENTS TO ALL SAID TERMS AND CONDITIONS AS STATED HEREON

OWNER DATE

Owner/Applicant

Mid-Hudson Development
982 NY-82,
Hopewell Junction, NY 12533

Brian J. Stokosa, PE

STATE OF NEW YORK · BRIAN J. STOKOSA · 083970 · LICENSED PROFESSIONAL ENGINEER

Revisions

Project No. 2021:xxx

License No. 083970

DAY | STOKOSA ENGINEERING P.C.

3 Van Wyck Lane
Wappingers Falls, New York 12590
(845)-223-3202

PROJECT
MID HUDSON DEVELOPMENT
Town of Wappinger Dutchess County, New York

DRAWING
LOT LINE REALIGNMENT
FILED MAP 9132 LOTS 1 & 3

SCALE	DRAWN BY	DRAWING No.
AS NOTED	BJS	2
DATE 1-11-22	CHECKED BY BJS	2 of 2