SITE PLAN - SCALE: 1" = 50'

SITE PLAN
A000
2 OF 10

suncommon
SUNCOMMON CONFIDENTIAL AND PROPRIETARY

SUNCOMMON
1155 FLATBUSH ROAD
KINGSTON, NY 12401
(866)-452-7652

MID HUDSON ISLAMIC ASSOC.
AHMAD SHAH
125 ALL ANGELS HILL RD
WAPPINGERS FALLS, NY 12590
MUNICIPALITY OF WAPPINGER
DUTCHESS COUNTY
SBL: 628535

PAGE REVISION HISTORY

DB	REV	DATE	NOTES
TMM	A	11/18/2021	ORIGINAL
TMM	B	5/6/2022	CHANGED LAYOUT & MOVED AC DISCONNECT

SYSTEM DETAILS

DC SYSTEM SIZE (kWp):	36.9	MODULE (QTY) MODEL:	(82) LG450N2W-E6
AC SYSTEM SIZE (kW):	30.0	INVERTER (QTY) MODEL:	(3) SE10000H-US
AC/DC RATIO:	1.23	OPTIMIZER (QTY) MODEL:	(82) P505
SERVICE SIZE (A):	400 A	UTILITY:	CENTRAL HUDSON GAS AND ELEC
SERVICE TYPE (V):	120/240V 1PH	SERVICE TYPE:	UNDERGROUND

MODULE LAYOUT / BLDG ROOF - SCALE: 1" = 15'

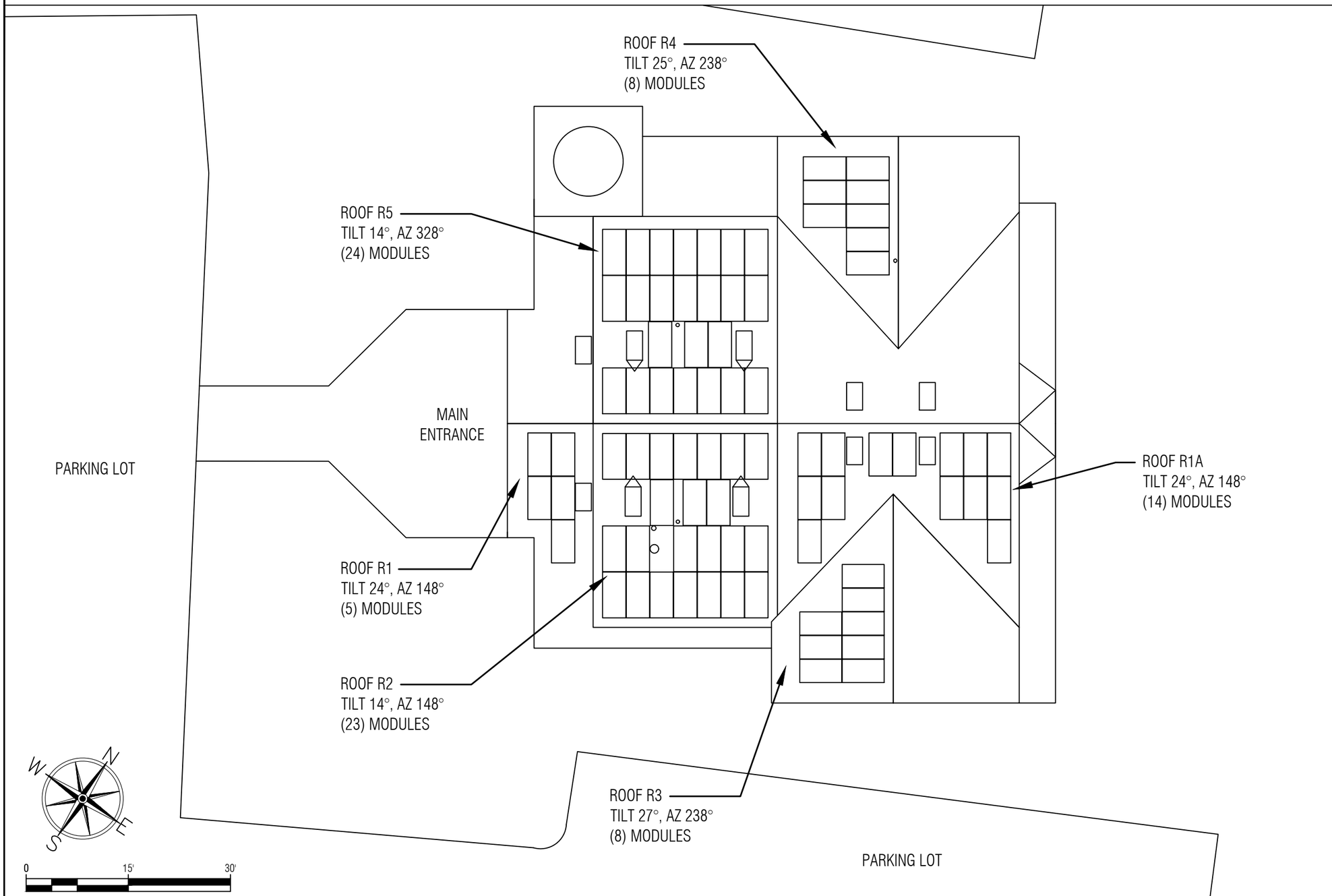

ROOF MOUNT DETAILS

ARRAY SQUARE FOOTAGE:	1,325 FT²
TOTAL DISTRIBUTED LOAD:	2.40 psf
ROOF TYPE:	ASPHALT SHINGLE
MODULE TILT (°):	18° (R2 & R3)/ 26° (R1)
MAX ALLOWABLE ATTACHMENT SPACING (INCHES):	48"?
MAX ALLOWABLE RAIL CANTILEVER (INCHES):	19"?
RAIL TYPE:	SNAPNRACK UR40
ATTACHMENT TYPE:	SNR SPEEDSEAL FOOT

ROOF ATTACHMENT DETAIL

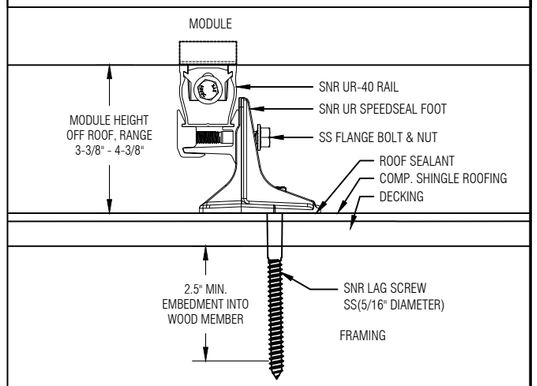

NOTES

ALL PROPOSED WORK SHALL MEET THE STANDARDS SPECIFIED IN THE 2015 IRC WITH NEW WORK STATE 2017 UNIFORM CODE SUPPLEMENT (R324.3 / R324)

MODULE LAYOUT

A001

3 OF 10

suncommon
SUNCOMMON CONFIDENTIAL AND PROPRIETARY

SUNCOMMON
1155 FLATBUSH ROAD
KINGSTON, NY 12401
(866)-452-7652

MID HUDSON ISLAMIC ASSOC.
AHMAD SHAH
125 ALL ANGELS HILL RD
WAPPINGERS FALLS, NY 12590
MUNICIPALITY OF WAPPINGER
DUTCHESS COUNTY
SBL: 628535

PAGE REVISION HISTORY

DB	REV	DATE	NOTES
TMM	A	9/01/2021	ORIGINAL
TMM	B	11/18/2021	ADDED SYSTEM DETAILS
TMM	C	5/6/2022	CHANGED LAYOUT

SYSTEM DETAILS

DC SYSTEM SIZE (kWp):	36.9	MODULE (QTY) MODEL:	(82) LG450N2W-E6
AC SYSTEM SIZE (kW):	30.0	INVERTER (QTY) MODEL:	(3) SE10000H-US
AC/DC RATIO:	1.23	OPTIMIZER (QTY) MODEL:	(82) P505
SERVICE SIZE (A):	400 A	UTILITY:	CENTRAL HUDSON GAS AND ELEC
SERVICE TYPE (V):	120/240V 1PH	SERVICE TYPE:	UNDERGROUND

MODULE LAYOUT / BLDG ROOF - SCALE: 1" = 10'

ROOF R1 - SOUTHEAST FACING

TILT: 24° MODULE QTY: 5

AZIMUTH: 148° ARRAY AREA: 120 FT^2

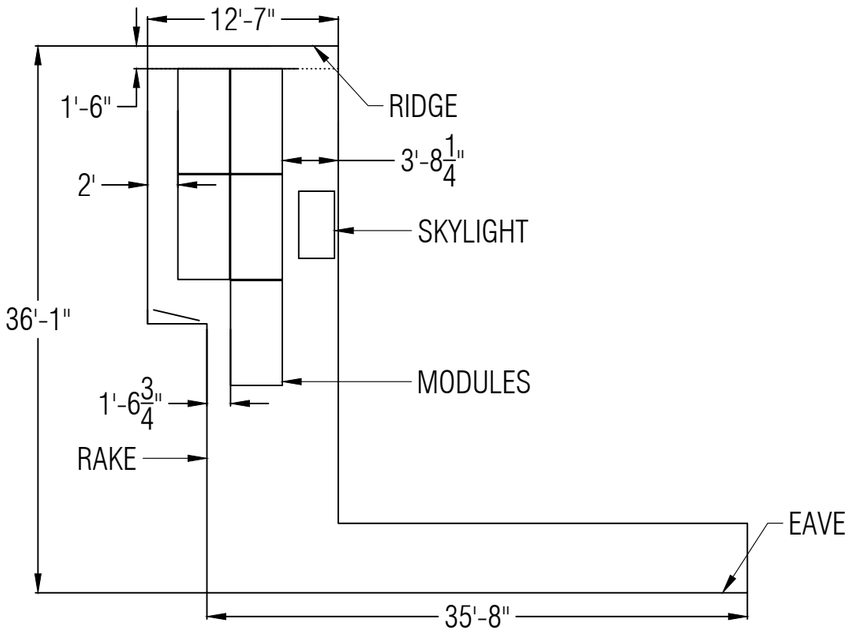

ROOF R2 - SOUTHEAST FACING

TILT: 14° MODULE QTY: 23

AZIMUTH: 148° ARRAY AREA: 554 FT^2

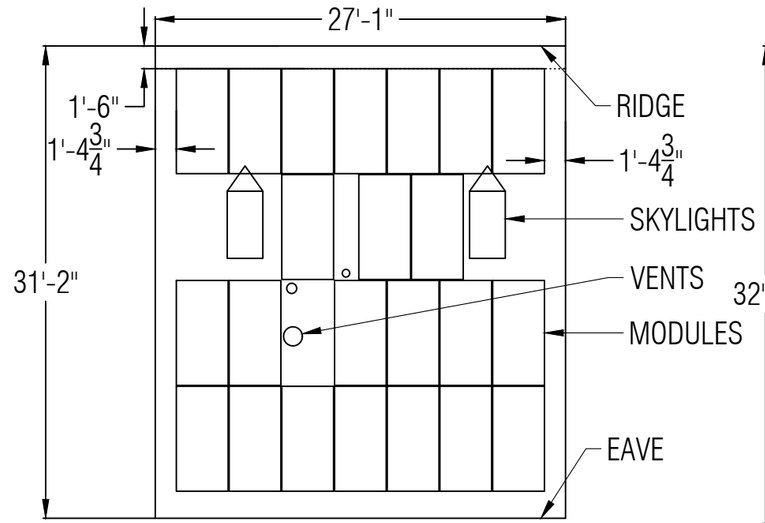

ROOF R1(A) - SOUTHEAST FACING

TILT: 24° MODULE QTY: 14

AZIMUTH: 148° ARRAY AREA: 336 FT^2

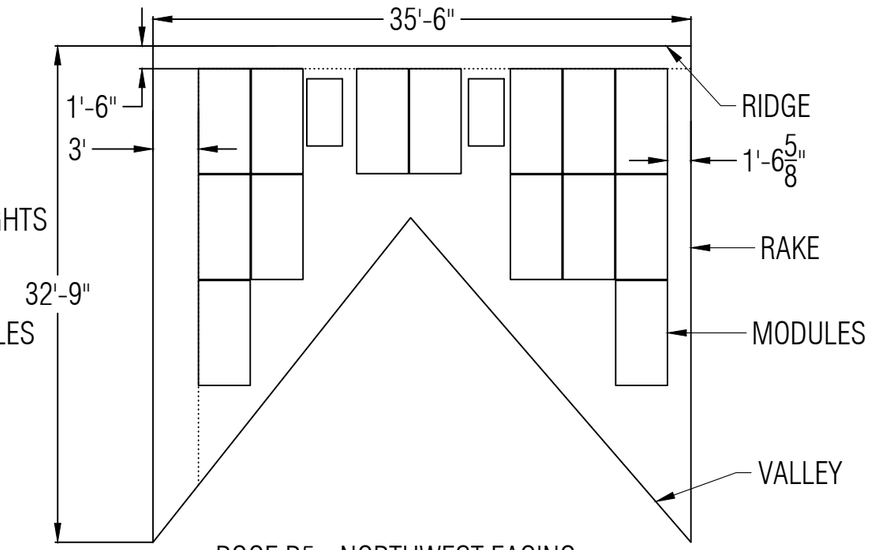

ROOF R5 - NORTHWEST FACING

TILT: 14° MODULE QTY: 24

AZIMUTH: 328° ARRAY AREA: 579 FT^2

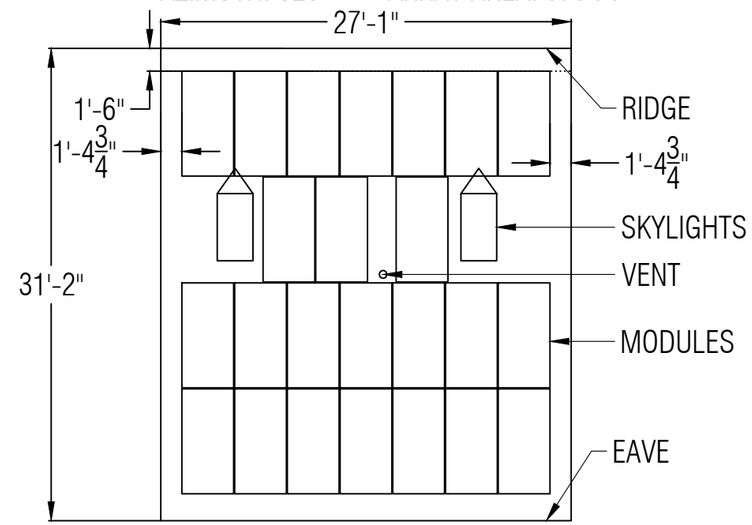

ROOF R3 - SOUTHWEST FACING

TILT: 27° MODULE QTY: 8

AZIMUTH: 238° ARRAY AREA: 193 FT^2

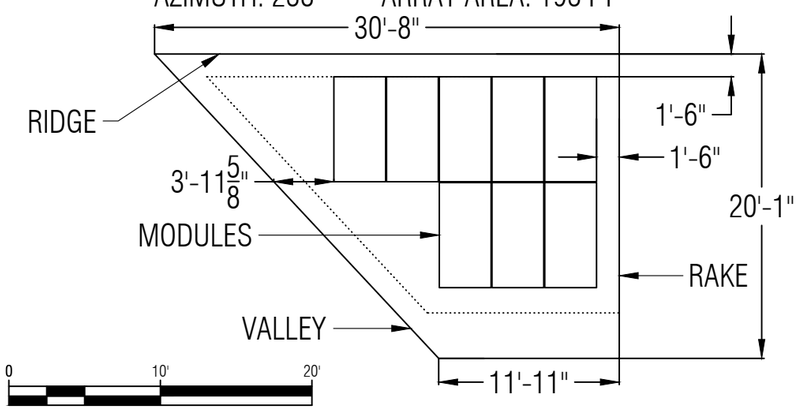

ROOF R4 - SOUTHWEST FACING

TILT: 25° MODULE QTY: 8

AZIMUTH: 238° ARRAY AREA: 193 FT^2

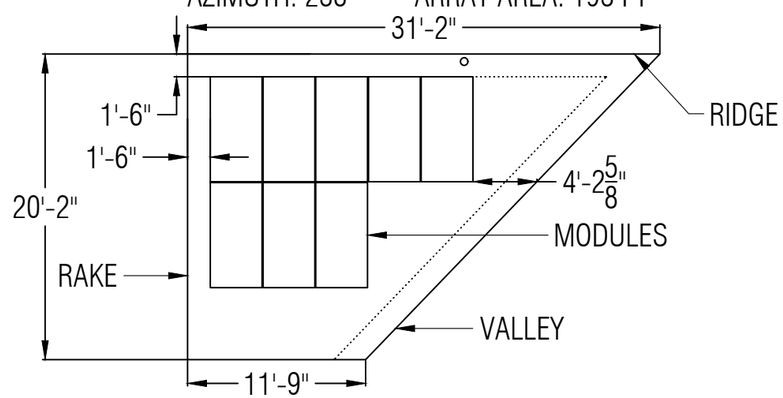

ROOF DETAILS
A002
4 OF 10

suncommon

SUNCOMMON CONFIDENTIAL AND PROPRIETARY

SUNCOMMON
1155 FLATBUSH ROAD
KINGSTON, NY 12401
(866)-452-7652

MID HUDSON ISLAMIC ASSOC.
AHMAD SHAH
125 ALL ANGELS HILL RD
WAPPINGERS FALLS, NY 12590
MUNICIPALITY OF WAPPINGER
DUTCHESS COUNTY
SBL: 628535

PAGE REVISION HISTORY

DB	REV	DATE	NOTES
TMM	A	5/6/2022	ORIGINAL

SYSTEM DETAILS

DC SYSTEM SIZE (kWp):	36.9	MODULE (QTY) MODEL:	(82) LG450N2W-E6
AC SYSTEM SIZE (kW):	30.0	INVERTER (QTY) MODEL:	(3) SE10000H-US
AC/DC RATIO:	1.23	OPTIMIZER (QTY) MODEL:	(82) P505
SERVICE SIZE (A):	400 A	UTILITY:	CENTRAL HUDSON GAS AND ELEC
SERVICE TYPE (V):	120/240V 1PH	SERVICE TYPE:	UNDERGROUND

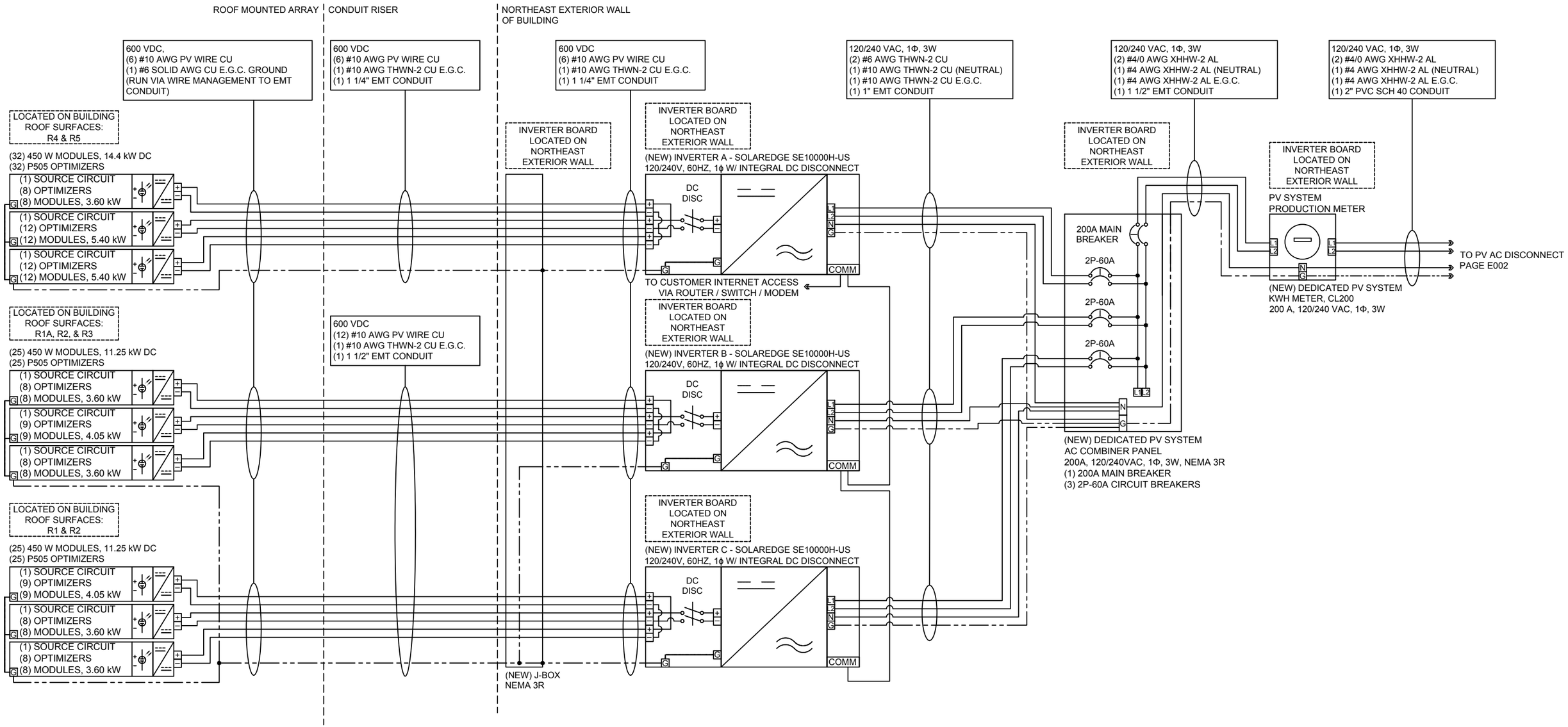

3LD - I

E001

8 OF 10

suncommon

SUNCOMMON CONFIDENTIAL AND PROPRIETARY

SUNCOMMON
1155 FLATBUSH ROAD
KINGSTON, NY 12401
(866)-452-7652

MID HUDSON ISLAMIC ASSOC.
AHMAD SHAH
125 ALL ANGELS HILL RD
WAPPINGERS FALLS, NY 12590
MUNICIPALITY OF WAPPINGER
DUTCHESS COUNTY
SBL: 628535

PAGE REVISION HISTORY

DB	REV	DATE	NOTES
TMM	A	05/06/2022	ORIGINAL

SYSTEM DETAILS

DC SYSTEM SIZE (kWp):	36.9	MODULE (QTY) MODEL:	(82) LG450N2W-E6
AC SYSTEM SIZE (kW):	30.0	INVERTER (QTY) MODEL:	(3) SE10000H-US
AC/DC RATIO:	1.23	OPTIMIZER (QTY) MODEL:	(82) P505
SERVICE SIZE (A):	400 A	UTILITY:	CENTRAL HUDSON GAS AND ELEC
SERVICE TYPE (V):	120/240V 1PH	SERVICE TYPE:	UNDERGROUND

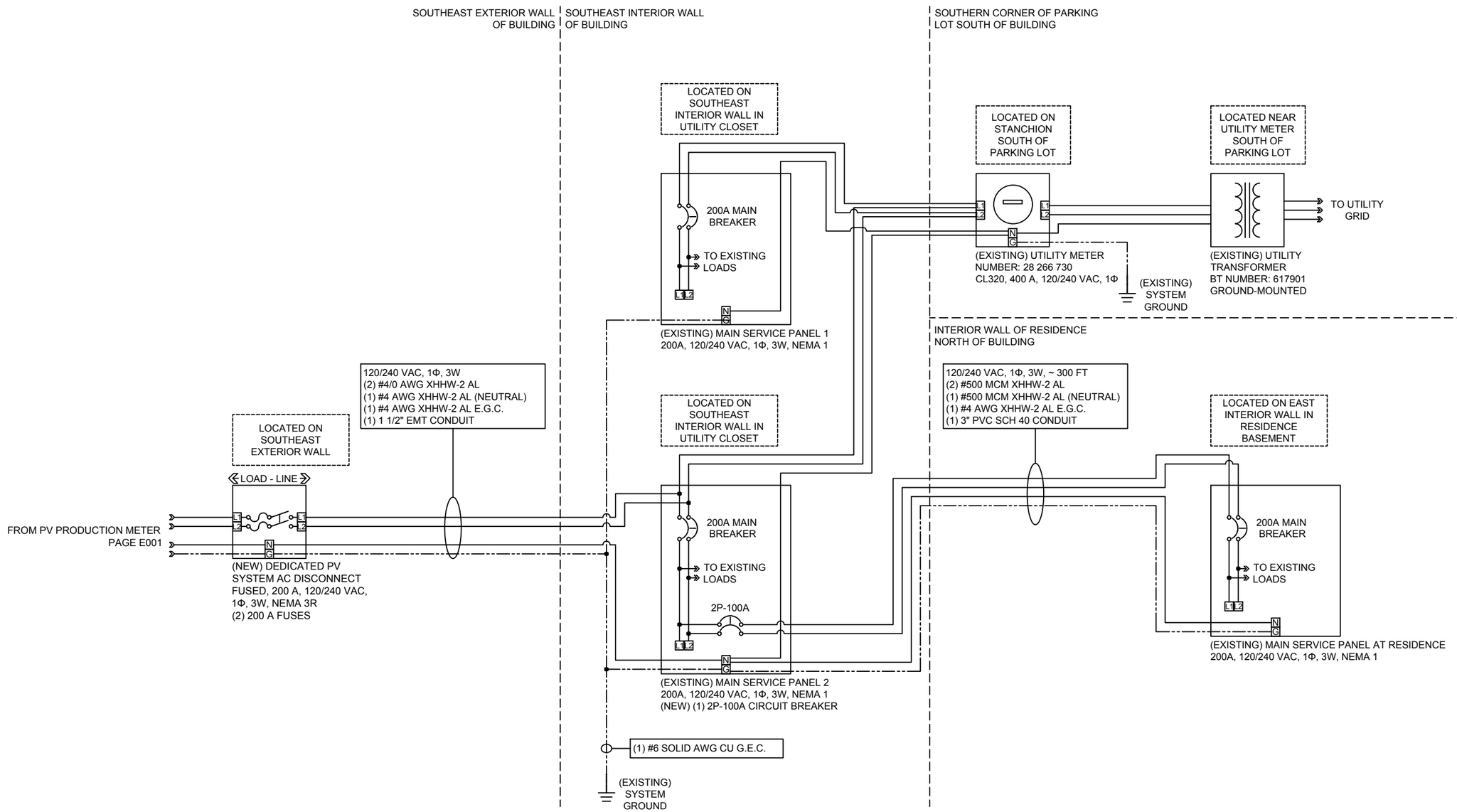

3LD - II	SUNCOMMON 1155 FLATBUSH ROAD KINGSTON, NY 12401 (866)-452-7652	MID HUDSON ISLAMIC ASSOC. AHMAD SHAH 125 ALL ANGELS HILL RD WAPPINGERS FALLS, NY 12590 MUNICIPALITY OF WAPPINGER DUTCHESS COUNTY SBL: 628535	
E002			
9 OF 10			

suncommon
SUNCOMMON CONFIDENTIAL AND PROPRIETARY

PAGE REVISION HISTORY

DB	REV	DATE	NOTES
TMM	A	05/06/2022	ORIGINAL

SYSTEM DETAILS

DC SYSTEM SIZE (kWp):	36.9	MODULE (QTY) MODEL:	(82) LG450N2W-E6
AC SYSTEM SIZE (kW):	30.0	INVERTER (QTY) MODEL:	(3) SE10000H-US
AC/DC RATIO:	1.23	OPTIMIZER (QTY) MODEL:	(82) P505
SERVICE SIZE (A):	400 A	UTILITY:	CENTRAL HUDSON GAS AND ELEC
SERVICE TYPE (V):	120/240V 1PH	SERVICE TYPE:	UNDERGROUND