# 150111: 17.710 kWp

# J.P. MORGAN CHASE

## 1460 Route 9

## WAPPINGERS FALLS, NY 12590-4425

## ASSESSOR'S #: 615700000000000000

| DRAWING INDEX | |
|---|---|
| DRAWING NUMBER | SHEET TITLE |
| G10 | COVER PAGE |
| G20 | SITE PLAN |
| E10 | ELECTRICAL ROOF PLAN |
| E20 | THREE LINE DIAGRAM & BILL OF MATERIALS |
| E21 | ONE LINE DIAGRAM |
| E30 | PLACARDS |
| REQUIRED STANDARD DRAWING INDEX | |
| DRAWING NUMBER | SHEET TITLE |
| SG10 | COVER PAGE |
| SG20 | GENERAL NOTES |
| SG21 | GENERAL NOTES |
| SS10 | FLAT ROOF CONNECTION DETAILS |
| SE10 | ELECTRICAL DETAILS |
| SE12 | ELECTRICAL DETAILS NEC 2017 |
| SE20C | METERING AND SURGE PROTECTION DETAILS 3-PHASE (208V) |
| SR10 | THREE PHASE SYSTEM CUTSHEETS |
| SR25 | ELECTRICAL DATA CUTSHEETS |
| SR26 | ELECTRICAL DATA CUTSHEETS |
| SR30 | STRUCTURAL COMPONENT CUTSHEETS |

PROJECT INFORMATION

SITE DATA:
PARCEL NUMBER: 135689-6157-02-650897-0000

AUTHORITIES HAVING JURISDICTION
BUILDING: TOWN OF WAPPINGER
ZONING: TOWN OF WAPPINGER
UTILITY: CENTRAL HUDSON

DESIGN SPECIFICATIONS
OCCUPANCY: B
CONSTRUCTION: COMMERCIAL / INDUSTRIAL
GROUND SNOW LOAD: 30 PSF
WIND SPEED: 113 MPH

DESIGN SPECIFICATIONS
RISK CATEGORY: II
SITE CLASS: D (DEFAULT)
SEISMIC IMPORTANCE FACTOR: 1.0
SEISMIC DESIGN CATEGORY: B
SS: 0.217
S1: 0.056
SDS: 0.231
SD1: 0.090
ANALYSIS PROCEDURE: NONSTRUCTURAL COMPONENTS

DESIGN CODES & STANDARDS
BUILDING: 2020 BUILDING CODE OF NEW YORK STATE
ELECTRICAL: 2017 NEC
FIRE: 2020 FIRE CODE OF NEW YORK STATE

**List of Adjacent Property Owners**

*135689-6157-02-682906-0000- Patricia C Parsons*
*135689-6157-02-641877-0000- Eric Unterreiner Stephanie Blackmon*
*135689-6157-02-608885-0000- Executive Square Associates*
*135689-6157-02-609919-0000- US9 Realty LLC*
*135689-6157-02-648928-0000- GTY NY Leasing Inc*

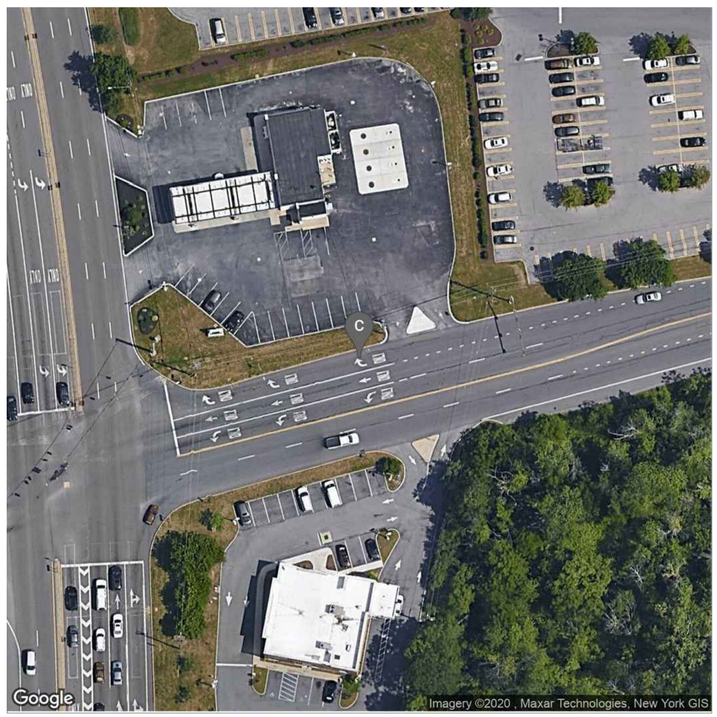


01 AERIAL PHOTO
NOT TO SCALE

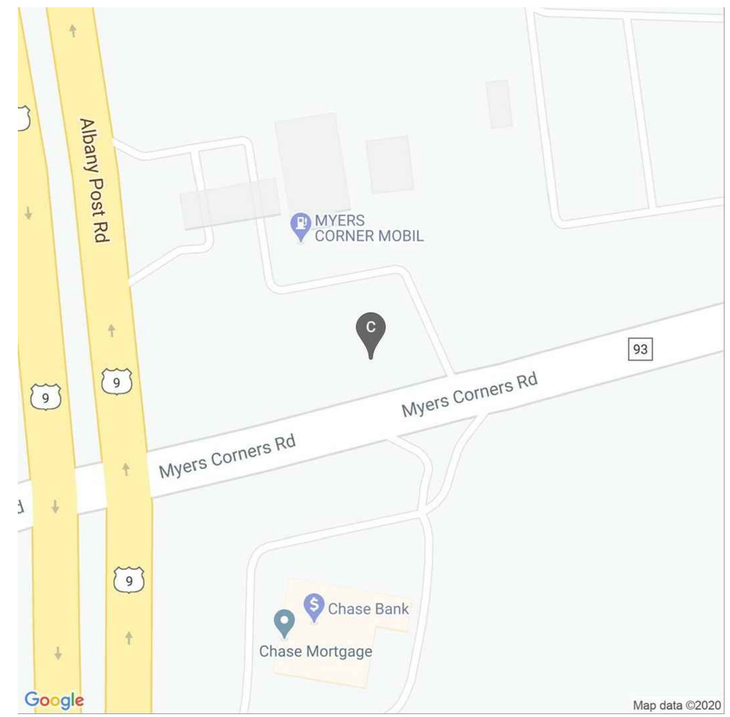


02 VICINITY MAP
NOT TO SCALE

WARNING:
IT IS A VIOLATION OF THE NYS EDUCATION LAW ARTICLE 145 FOR ANY PERSON, UNLESS HE OR SHE IS ACTING UNDER THE DIRECTION OF A LICENSED PROFESSIONAL ENGINEER, TO ALTER THIS ITEM IN ANY WAY.

ISSUED FOR PERMITTING
THE DISTRIBUTION AND USE OF THE NATIVE FORMAT CAD FILE OF THIS DRAWING IS UNCONTROLLED. THE USER SHALL VERIFY TRACEABILITY OF THIS DRAWING TO THE LATEST CONTROLLED VERSION.

STATE OF NEW YORK · NATHANIEL ELLIS BOLDS JR. · 102997 · LICENSED PROFESSIONAL ENGINEER
Date Signed: 08/16/2022
License Expires: 04/30/2023

| NO | DATE | REVISIONS AND RECORD OF ISSUE | DRN | DES | CHK | PDE | APP |
|---|---|---|---|---|---|---|---|
| 2 | 16/AUG/22 | ISSUED FOR PERMITTING - REVISED PER AHJ COMMENTS | AWC | AWC | WL | NEB | NEB |
| 1 | 05/MAY/22 | ISSUED FOR PERMITTING - REVISED PER UTILITY COMMENTS | AWC | AWC | WL | NEB | NEB |
| 0 | 22/APR/21 | ISSUED FOR PERMITTING | ASG | CTN | AT | NEB | NEB |

I HEREBY CERTIFY THAT THIS DOCUMENT WAS PREPARED BY ME OR UNDER MY DIRECT SUPERVISION AND THAT I AM A DULY REGISTERED PROFESSIONAL ENGINEER UNDER THE LAWS OF THE STATE OF NEW YORK
SIGNED NATHANIEL ELLIS BOLDS,JR
DATE 22/APR/21 REG NO. 102997

BLACK & VEATCH

| | | | |
|---|---|---|---|
| DESIGNER CTN | DRAWN ASG | J.P. MORGAN CHASE<br>1460 ROUTE 9, WAPPINGERS FALLS, NY 12590-4425 | PROJECT NY-150111 |
| CHECKED AT | DATE 22/APR/21 | COVER PAGE | DRAWING NUMBER G10 / REV 2 |
| | | | CODE / AREA |

ANSI D 34x22
02/14/2017 04:16 PM

| ROOF DESIGN CLEARANCE TABLE (SEE LEGEND FOR APPLICABLE HATCH) | |
|---|---|
| ITEM | MINIMUM CLEARANCE DIMENSIONS |
| FLAT ROOF | 4'-0" |
| PITCHED ROOF: ALONG RIDGE | 6'-0" (3'-0" MINIMUM EACH SIDE) |
| PITCHED ROOF: ALONG HIPS/VALLEY | 3'-0" (18" MINIMUM EACH SIDE) |
| PITCHED ROOF: ALONG EAVE/FREE EDGE | 0'-10" |
| PITCHED ROOF: OTHER CLEARANCE ON ROOF PLANE | 3'-0" |

NOTES:

1. THE PROVISIONS OF THE INTERNATIONAL FIRE CODE 2018, SEC. 1204.2.1 PERTAINING TO GROUP R-3 BUILDINGS (ONE OR TWO FAMILY DWELLINGS) SPECIFIES SETBACKS AND PATHWAYS FOR PITCHED ROOFS. EXCEPTION TO SEC. 1204.3 STATES THAT IF THE FIRE CODE OFFICIAL DETERMINES THAT THE ROOF CONFIGURATION FOR A BUILDING OTHER THAN GROUP R-3 IS SIMILAR TO THAT OF A GROUP R-3 OCCUPANCY, THE RESIDENTIAL ACCESS REQUIREMENTS IN SEC. 1204.2.1 ARE A SUITABLE ALTERNATIVE. THEREFORE, CONSIDERING FIREFIGHTING OPERATIONS, BUILDINGS WITH A PITCHED ROOF HAVE BEEN CONSIDERED SIMILAR TO THAT OF A GROUP R-3 BUILDING AND THE PROVISIONS OF SEC. 1204.2.1 WERE USED.

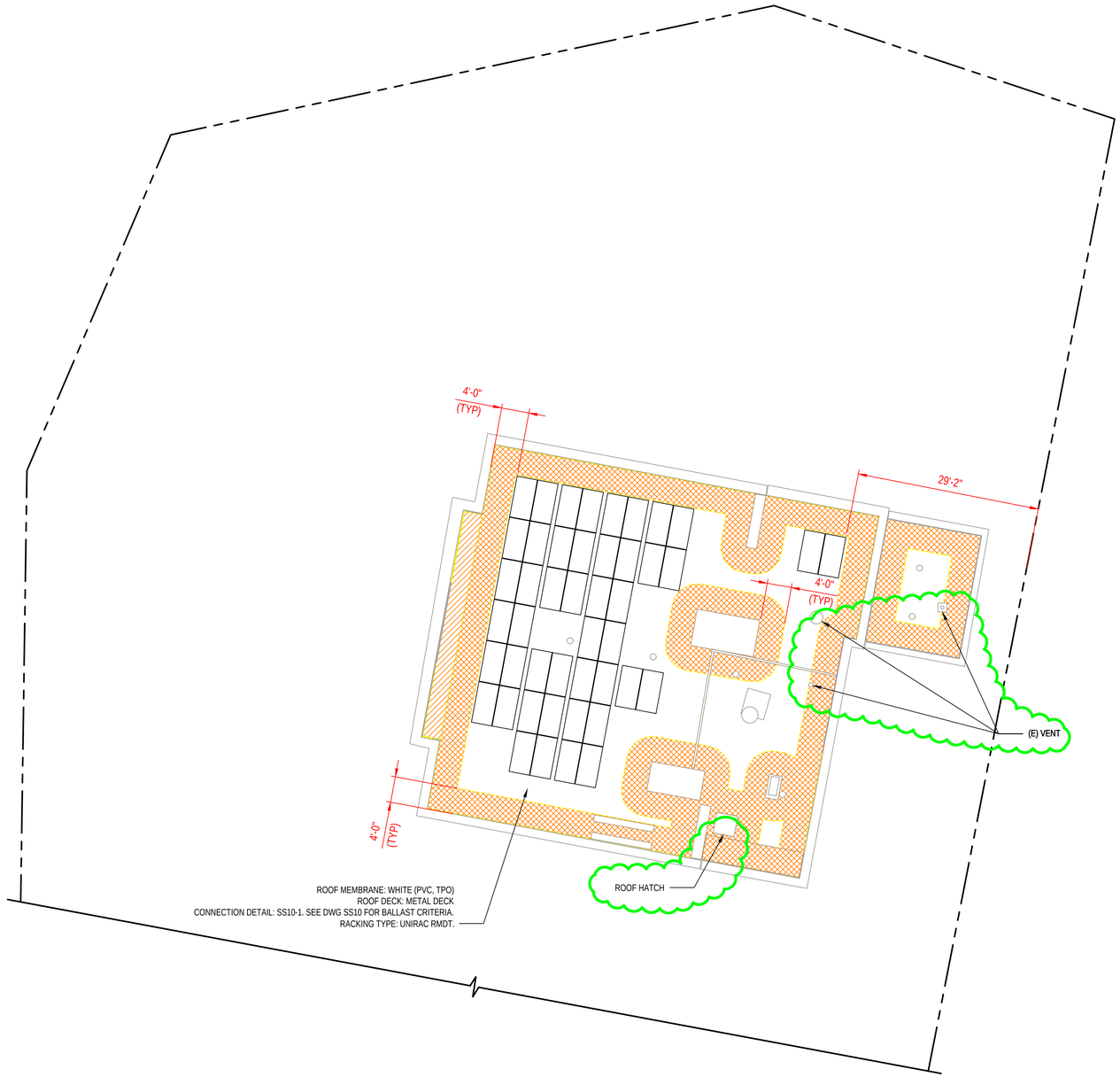


| ROOF CONNECTION DETAIL TABLE | | | | | |
|---|---|---|---|---|---|
| DRAWING | DETAIL | ROOF SLOPE | FRAMING TYPE | ROOF TYPE | CONNECTION LOCATION NOTES |
| SS10 | 1 | FLAT | ROOF DECK | VARIES SEE SITE PLAN | SEE RACKING SITE SPECIFIC DRAWING PACKAGE IF APPLICABLE. |
| SS10 | 2 | FLAT | ROOF DECK | LOOSE GRAVEL | |
| SS21 | 1 | PITCHED | WOOD MEMBERS | ASPHALT SHINGLE | SEE DRAWING SS20 |
| SS21 | 2 | PITCHED | ROOF DECK | SINGLE-PLY MEMBRANE | SEE DRAWING SS20 |
| SS21 | 3 | PITCHED | NA | METAL STANDING SEAM | SEE DRAWING SS20 |
| SS21 | 4 | PITCHED | WOOD MEMBERS | CORRUGATED METAL | SEE DRAWING SS20 |
| SS21 | 5 | PITCHED | STEEL MEMBERS | ASPHALT SHINGLE | SEE DRAWING SS20 |
| SS22 | 1 | PITCHED | WOOD MEMBERS | TILE | SEE DRAWING SS20 |
| SS22 | 2 | PITCHED | WOOD MEMBERS | TILE | SEE DRAWING SS20 |
| SS22 | 3 | PITCHED | WOOD MEMBERS | TILE | SEE DRAWING SS20 |
| SS22 | 4 | PITCHED | WOOD MEMBERS | TILE | SEE DRAWING SS20 |
| SS22 | 5 | PITCHED | WOOD MEMBERS | TILE | SEE DRAWING SS20 |

NOTES:
1. ROOFS WITH SLOPE LESS THAN 7 DEGREES ARE CONSIDERED "FLAT". ROOFS WITH SLOPE GREATER THAN 7 DEGREES ARE CONSIDERED "PITCHED". REFER TO SITE SPECIFIC DWG E10 FOR ROOF SLOPE.
2. FRAMING TYPE AND ROOF TYPE SHALL BE VERIFIED ON SITE PRIOR TO INSTALLATION.

LEGEND:

- FLAT ROOF CLEARANCE AREA
- PITCHED ROOF CLEARANCE AREA
- (E) EXISTING
- (E) PROPERTY LINE

NOTES:
1. CONTRACTORS SHALL FIELD VERIFY ALL DIMENSIONS AND ROOF SLOPES AND COORDINATE WITH ALL REFERENCE DRAWINGS AS REQUIRED. IF THE CONTRACTOR ENCOUNTERS CONDITIONS OTHER THAN WHAT IS SHOWN ON THE DRAWINGS, CONTRACTOR SHALL NOTIFY THE ENGINEER OF RECORD PRIOR TO START OF CONSTRUCTION.
2. SEE SHEET SG20 AND SG21 FOR GENERAL NOTES, LEGEND AND SYMBOLS.
3. FOR ROOF CONNECTION LAYOUT CRITERIA WITH EVEREST RAIL SEE DWG SS20 UNLESS NOTED OTHERWISE ON THIS SHEET.
4. OBSTRUCTIONS IN CLEARANCE AREA PATHWAYS SHALL BE KEPT TO A MINIMUM.
5. SOLAR ASSEMBLY DOES NOT INCREASE EXISTING BUILDING HEIGHT FOR PITCHED ROOFS. FOR FLAT ROOFS, SOLAR ASSEMBLY EXTENDS 11 3/8" MAXIMUM ABOVE ROOF SURFACE WITH UNIRAC RMDT RACKING AND EXTENDS 1'-1 7/8" MAXIMUM ABOVE ROOF SURFACE WITH IRONRIDGE BX RACKING.

01 SITE PLAN
SCALE: 3/32" = 1'-0"

N

PARCEL DATA FROM LANDGRID.COM

WARNING:
IT IS A VIOLATION OF THE NYS EDUCATION LAW ARTICLE 145 FOR ANY PERSON, UNLESS HE OR SHE IS ACTING UNDER THE DIRECTION OF A LICENSED PROFESSIONAL ENGINEER, TO ALTER THIS ITEM IN ANY WAY.

ISSUED FOR PERMITTING
THE DISTRIBUTION AND USE OF THE NATIVE FORMAT CAD FILE OF THIS DRAWING IS UNCONTROLLED. THE USER SHALL VERIFY TRACEABILITY OF THIS DRAWING TO THE LATEST CONTROLLED VERSION.

STATE OF NEW YORK · NATHANIEL ELLIS BOLDS JR. · 102997 · LICENSED PROFESSIONAL ENGINEER
Date Signed: 08/16/2022
License Expires: 04/30/2023

| NO | DATE | REVISIONS AND RECORD OF ISSUE | DRN | DES | CHK | PDE | APP |
|---|---|---|---|---|---|---|---|
| 2 | 16/AUG/22 | ISSUED FOR PERMITTING - REVISED PER AHJ COMMENTS | AWC | AWC | WL | NEB | NEB |
| 1 | 05/MAY/22 | ISSUED FOR PERMITTING - REVISED PER UTILITY COMMENTS | AWC | AWC | WL | NEB | NEB |
| 0 | 22/APR/21 | ISSUED FOR PERMITTING | ASG | CTN | AT | NEB | NEB |

I HEREBY CERTIFY THAT THIS DOCUMENT WAS PREPARED BY ME OR UNDER MY DIRECT SUPERVISION AND THAT I AM A DULY REGISTERED PROFESSIONAL ENGINEER UNDER THE LAWS OF THE STATE OF NEW YORK
SIGNED NATHANIEL ELLIS BOLDS,JR
DATE 22/APR/21 REG NO. 102997

BLACK & VEATCH

| DESIGNER | DRAWN |
|---|---|
| CTN | ASG |
| CHECKED | DATE |
| AT | 22/APR/21 |

J.P. MORGAN CHASE
1460 ROUTE 9, WAPPINGERS FALLS, NY 12590-4425

SITE PLAN

| PROJECT | DRAWING NUMBER | REV |
|---|---|---|
| | NY-150111-G20 | 2 |
| CODE | | |
| AREA | | |

ANSI D 34x22
02/14/2017 04:16 PM

| ROOF DESIGN CLEARANCE TABLE (SEE LEGEND FOR APPLICABLE HATCH) | |
|---|---|
| ITEM | MINIMUM CLEARANCE DIMENSIONS |
| FLAT ROOF | 4'-0" |
| PITCHED ROOF: ALONG RIDGE | 6'-0" (3'-0" MINIMUM EACH SIDE) |
| PITCHED ROOF: ALONG HIPS/VALLEY | 3'-0" (18" MINIMUM EACH SIDE) |
| PITCHED ROOF: ALONG EAVE/FREE EDGE | 0'-10" |
| PITCHED ROOF: OTHER CLEARANCE ON ROOF PLANE | 3'-0" |

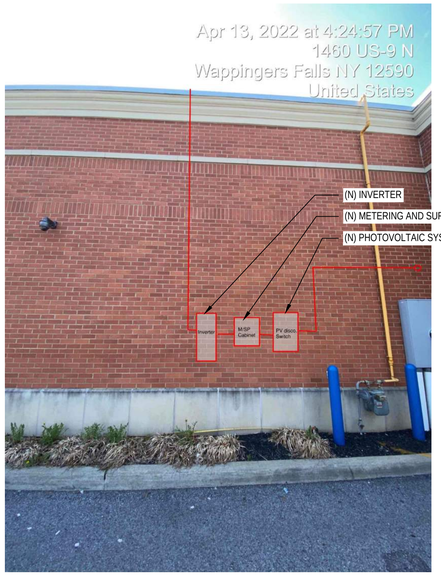


02 ELEVATION 1

NOT TO SCALE

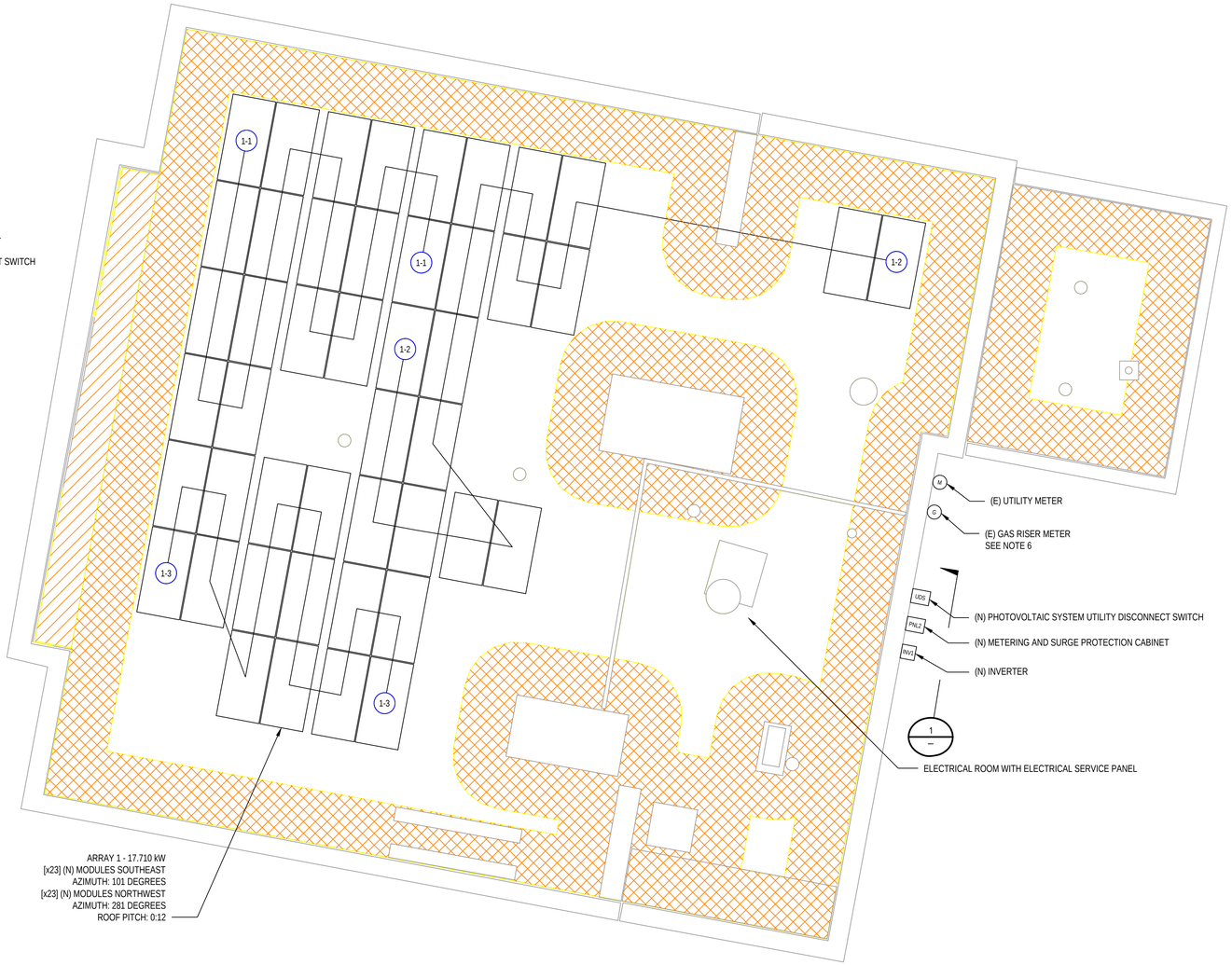


01 ELECTRICAL ROOF PLAN

SCALE: 3/16" = 1'-0"

N

LEGEND:

FLAT ROOF CLEARANCE AREA

PITCHED ROOF CLEARANCE AREA

(E) EXISTING

NOTES:

1. CONTRACTORS SHALL FIELD VERIFY ALL DIMENSIONS AND ROOF SLOPES AND COORDINATE WITH ALL REFERENCE DRAWINGS AS REQUIRED. IF THE CONTRACTOR ENCOUNTERS CONDITIONS OTHER THAN WHAT IS SHOWN ON THE DRAWINGS, CONTRACTOR SHALL NOTIFY THE ENGINEER OF RECORD PRIOR TO START OF CONSTRUCTION.
2. SEE SHEET SG20 AND SG21 FOR GENERAL NOTES, LEGEND AND SYMBOLS.
3. SEE SHEETS SE10 AND SE11 FOR ELECTRICAL DETAILS.
4. FOR THREE PHASE SYSTEMS, MODULES OF SIMILAR ORIENTATION SHALL BE PAIRED WITH ONE OPTIMIZER WHERE POSSIBLE.
5. OBSTRUCTIONS IN CLEARANCE AREA PATHWAYS SHALL BE KEPT TO A MINIMUM. WHERE CONDUIT INTERSECTS CLEARANCE AREA PATHWAYS, CONDUIT SHALL BE PLACED TRANSVERSE TO CLEARANCE AREA PATHWAYS.
6. SUBCONTRACTORS TO MAINTAIN MINIMUM 3' RADIAL CLEARANCE FROM GAS RISER METER.
7. SUBCONTRACTOR SHALL PAINT CONDUIT TO MATCH THE BUILDING COLOR SUBCONTRACTOR SHALL PAINT UTILITY DISCONNECT SWITCH ENCLOSURE, METERING AND SURGE PROTECTION CABINET TO MATCH THE BUILDING COLOR SCHEME. SUBCONTRACTOR SHALL ENSURE THAT EQUIPMENT NAMEPLATES AND LABELS ARE NOT PAINTED. THE INVERTER SHALL REMAIN UNPAINTED.

WARNING:
IT IS A VIOLATION OF THE NYS EDUCATION LAW ARTICLE 145 FOR ANY PERSON, UNLESS HE OR SHE IS ACTING UNDER THE DIRECTION OF A LICENSED PROFESSIONAL ENGINEER, TO ALTER THIS ITEM IN ANY WAY.

ISSUED FOR PERMITTING

THE DISTRIBUTION AND USE OF THE NATIVE FORMAT CAD FILE OF THIS DRAWING IS UNCONTROLLED. THE USER SHALL VERIFY TRACEABILITY OF THIS DRAWING TO THE LATEST CONTROLLED VERSION.

STATE OF NEW YORK · BRIAN CAULEY ROGERS · 103183 · LICENSED PROFESSIONAL ENGINEER

Date Signed: 08/16/2022
License Expires: 06/30/2023

| NO | DATE | REVISIONS AND RECORD OF ISSUE | DRN | DES | CHK | PDE | APP |
|---|---|---|---|---|---|---|---|
| 2 | 16/AUG/22 | ISSUED FOR PERMITTING - REVISED PER AHJ COMMENTS | AWC | AWC | BCR | BCR | BCR |
| 1 | 05/MAY/22 | ISSUED FOR PERMITTING - REVISED PER UTILITY COMMENTS | AWC | AWC | BCR | BCR | BCR |
| 0 | 22/APR/21 | ISSUED FOR PERMITTING | ASG | ASG | APN | BCR | BCR |

I HEREBY CERTIFY THAT THIS DOCUMENT WAS PREPARED BY ME OR UNDER MY DIRECT SUPERVISION AND THAT I AM A DULY REGISTERED PROFESSIONAL ENGINEER UNDER THE LAWS OF THE STATE OF NEW YORK

SIGNED BRIAN C. ROGERS

DATE 22/APR/21 REG NO. 103183

BLACK & VEATCH

DESIGNER ASG | DRAWN ASG | CHECKED APN | DATE 22/APR/21

J.P. MORGAN CHASE
1460 ROUTE 9, WAPPINGERS FALLS, NY 12590-4425

ELECTRICAL ROOF PLAN

PROJECT NY-150111-E10 | DRAWING NUMBER | REV 2

CODE

AREA

ANSI D 34x22
02/14/2017 04:16 PM

| | | | CONDITIONS OF USE | | | | | | CONDUCTOR | EGC | CONDUIT | | | | CIRCUIT INFORMATION | | | | | | | |
|---|---|---|---|---|---|---|---|---|---|---|---|---|---|---|---|---|---|---|---|---|---|---|
| CIRCUIT ID | DESCRIPTION | NUMBER OF TYPICAL CIRCUITS | INSULATION TEMP. RATING | RACEWAY LOCATION | MODIFIED AMBIENT TEMPERATURE | # CURRENT CARRYING CONDUCTORS | CONDUIT FILL DERATE FACTOR | TEMPERATURE DERATE FACTOR | MINIMUM SPECIFICATION | MINIMUM SPECIFICATION | MIN SIZE | # OF CONDUCTORS | # OF EGC | CONDUIT FILL % | CONDUCTOR AMPACITY | CONDUCTOR DERATED AMPACITY | CONT. CURRENT | MAXIMUM CURRENT | OCPD | ESTIMATED CIRCUIT LENGTH | % VOLTAGE DROP | % AVERAGE LOSSES |
| 01 | STRING TO INVERTER (NOTE 1) | 3 | 90 °C | < 0.88" | 67 °C | 2 | 0.8 | 0.58 | 8 AWG, COPPER, PV WIRE | 10 AWG, COPPER, RHW-2 | 1.25", EMT | 6 | 1 | 33% | 55 A | 26 A | 15.0A | 18.8A | 20 | 176 FT | 1.03% | 1.03% |
| 02 | 14.4 KW INVERTER TO UTILITY DS | 1 | 90 °C | UNDER ROOF | 34 °C | 3 | 1 | 0.96 | 8 AWG, COPPER, THWN-2 | 10 AWG, COPPER, THWN-2 | 0.75", EMT | 4 | 1 | 31% | 55 A | 53 A | 40.0A | 50.0A | 50 | 10 FT | 0.26% | 0.26% |
| 03 | UTILITY DS TO POI | 1 | 90 °C | UNDER ROOF | 34 °C | 3 | 1 | 0.96 | 6 AWG, COPPER, THWN-2 | 10 AWG, COPPER, THWN-2 | 1.00", RMC | 4 | 1 | 25% | 75 A | 72 A | 40.0A | 50.0A | 50 | 25 FT | 0.41% | 0.41% |
| | | | | | | | | | | | | | | | | | | | | TOTAL | 1.70% | 1.70% |

| DESIGN PARAMETERS | |
|---|---|
| ASHRAE EXTREME LOW | -25.9 °C |
| ASHRAE 2% HIGH | 33.7 °C |
| SERVICE VOLTAGE | 208V, 3Φ |
| UTILITY | CENTRAL HUDSON |
| ELECTRICAL CODE | NEC 2017 |

| SYSTEM SUMMARY | |
|---|---|
| TOTAL DC POWER | 17,710 W |
| TOTAL AC POWER | 14,400 W |
| WEIGHTED ILR | 1.23 |
| INVERTER OUTPUT RATED VOLTAGE | 208 V |
| MAX AC CURRENT (208 V) | 40.0A |
| TRANSFORMATION VOLTAGE | 208 V |
| MAX AC CURRENT (208 V) | 40.0A |

| 120% CALCULATION PER 705.12(B)(2)(3)(B) | |
|---|---|
| PANEL BUS RATING | 400 A |
| MAIN SERVICE DISCONNECT RATING | 400 A |
| 125% INVERTER CURRENT | 50 A |
| SUM OF SUPPLY CURRENTS TO BUS | 400 A + 50 A = 450 A |
| 120% OF BUS RATING | 480 A |
| SUM OF SUPPLY CURRENTS MUST NOT EXCEED 120% OF BUS RATING | |

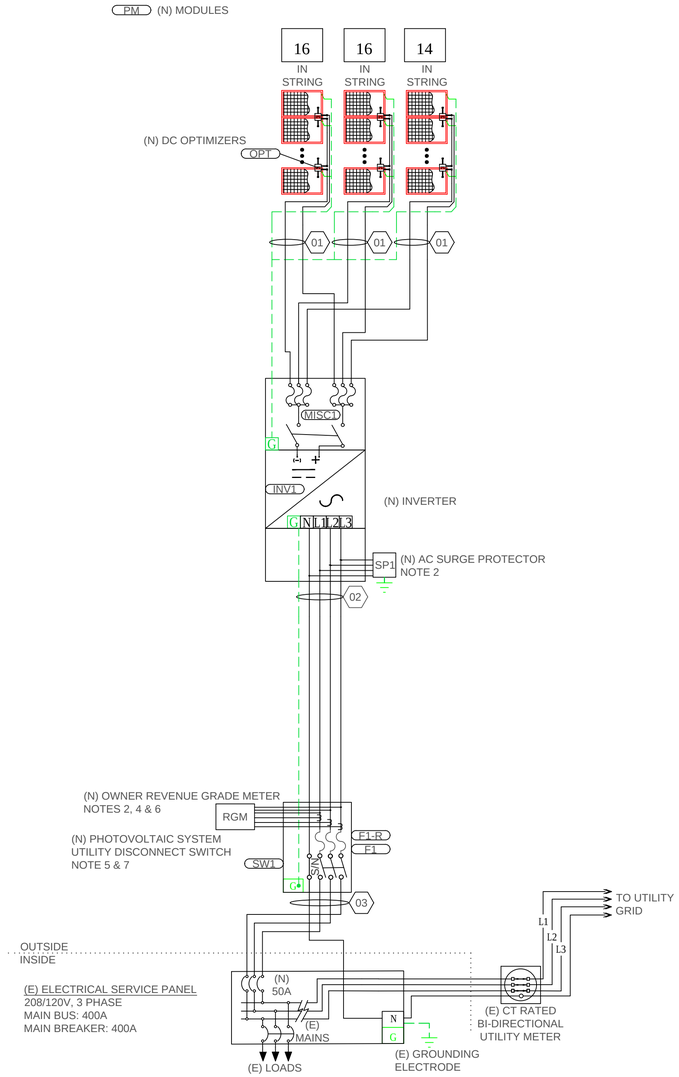


01 THREE LINE DIAGRAM

NOT TO SCALE

| | SYSTEM INFORMATION | | | | | | | DC WIRING LOSSES AT STC | | |
|---|---|---|---|---|---|---|---|---|---|---|
| | STRING INPUTS | MODULES IN SERIES | DC POWER (STC) | TOTAL DC POWER (STC) | INVERTER AC POWER | ILR | INVERTER OUTPUT CURRENT | ESTIMATED CIRCUIT LENGTH | % VOLTAGE DROP | % STC LOSS |
| INVERTER-1 | STRING 1-1 | 16 | 6,160 W | 17,710 W | 14,400 W | 1.23 | 40.0A | 189 | 1.13% | 1.13% |
| | STRING 1-2 | 16 | 6,160 W | | | | | 194 | 1.16% | 1.16% |
| | STRING 1-3 | 14 | 5,390 W | | | | | 144 | 0.75% | 0.75% |
| | | | | | | | WEIGHTED AVERAGE | | 1.03% | 1.03% |

| MODULE | |
|---|---|
| MAKE | MISSION SOLAR |
| MODEL | MSE385SR9S |
| POWER OUTPUT | 385 W |
| SHORT CIRCUIT Isc | 9.99 A |
| OPEN CIRCUIT VOLTAGE Voc | 48.53 V |
| RATED CURRENT Imp | 9.43 A |
| RATED VOLTAGE Vmp | 40.84 V |
| TEMPERATURE COEFFICIENT OF Voc | -0.28%/C |
| TEMPERATURE COEFFICIENT OF Isc | 0.045%/C |

| INVERTER | |
|---|---|
| MAKE | SOLAREDGE |
| MODEL | SE14.4KUS |
| MAXIMUM AC POWER OUTPUT | 14,400 W |
| AC RATED VOLTAGE | 208Y/120 V |
| MAX CONTINUOUS OUTPUT CURRENT | 40.0 A |
| RATED INPUT VOLTAGE | 400 V |
| MAXIMUM INPUT CURRENT | 38.0 A |
| MAXIMUM SHORT CIRCUIT CURRENT | 45.0 A |
| MAXIMUM INPUT VOLTAGE | 600 V |
| TRANSFORMER-LESS, UNGROUNDED | YES |

| OPTIMIZER | |
|---|---|
| MAKE | SOLAR EDGE |
| MODEL | P400 (3P) |
| RATED INPUT DC POWER | 400 W |
| MAXIMUM SYSTEM VOLTAGE | 1000 V |
| MAXIMUM OUTPUT CURRENT | 15.0 A |
| MAXIMUM OUTPUT VOLTAGE | 60 V |
| MAXIMUM INPUT VOLTAGE | 80 V |
| MAXIMUM SHORT CIRCUIT CURRENT | 10.1 A |
| MINIMUM MODULES IN SERIES | 10 |
| MAXIMUM MODULES IN SERIES | 18 |

DISTRIBUTOR BILL OF MATERIAL

| REF | CATEGORY | MAKE | MODEL | QTY | UNIT | DESCRIPTION |
|---|---|---|---|---|---|---|
| PM | MODULE | MISSION SOLAR | MSE385SR9S | 46 | EA | 385WP, 72 CELL SOLAR MODULE (PROVIDED BY JPMC) |
| OPT | DC OPTIMIZER | SOLAREDGE | P400 (3P) | 46 | EA | SOLAREDGE POWER OPTIMIZER |
| INV1 | 14.4KW INVERTER | SOLAREDGE | SE14.4KUS | 1 | EA | UTILITY INTERACTIVE DC-TO-AC INVERTER: 3-PHASE, 4-WIRE, 208/120VAC, NEMA 3R, NEC 2014 and 2017 RAPID SHUTDOWN COMPLIANT WITH FUSE KIT |
| CELL1 | CELLULAR CDMA KIT | SOLAREDGE | SE-CELL-B-R05-S-S4 | 1 | EA | CDMA MODEM W/SIM, INV≤33.3KVA, 5YRS, HB 15MIN |
| PNL2 | METERING AND SURGE PROTECTION CABINET | VARIES | DETAIL 01 | 1 | EA | REFER TO DRAWING SE20C FOR CABINET DESIGN AND BOM |
| SW1 | UTILITY DISCONNECT | EATON | DG324NRK | 1 | EA | 240VAC, 200A, 3 POLE GENERAL-DUTY,FUSIBLE, SINGLE-THROW DISCONNECT SWITCH, NEMA 3R |
| F1 | UTILITY DISCONNECT FUSE | BUSSMANN | FRN-R-50 | 3 | EA | FUSE, 50A, 250VAC, SCCR 200 kA |
| MISC1 | FUSED TERMINAL BLOCK | SOLAREDGE | DCD-3PH-6FHK-S1 | 1 | EA | POSITIVE AND NEGATIVE 25A FUSED TERMINAL BLOCKS |
| F1-R | FUSE REDUCER | BUSSMANN | 226-R | 3 | EA | 250V CLASS R FUSE REDUCER 35 TO 60A FOR 200A DISCONNECT |

LEGEND
(N) -NEW EQUIPMENT
(E) -EXISTING EQUIPMENT

NOTES:
1. THIS CABLE SIZE AND INSTALLATION ALSO APPLIES TO THE CABLE INTERCONNECTING MODULES IN THE SAME STRING WHERE IT IS NOT PROTECTED UNDERNEATH THE PV ARRAY. THE CONDUIT SIZE IS CALCULATED BASED ON THE MAXIMUM SET OF STRINGS ROUTED TO A SINGLE INVERTER.

2. AC SURGE PROTECTOR (SP1) AND OWNER REVENUE GRADE METER (RGM) SHOWN ON THE THREE LINE DIAGRAM ARE INSTALLED IN PNL2. REFER TO SE20 FOR TYPICAL WIRING DIAGRAM DETAILS.

3. SUBCONTRACTOR SHALL PURCHASE AND INSTALL NEW BREAKER AT END OF BUS BAR PER NEC 705.12(D)(2)

4. REFER TO ELECTRICAL DETAILS DRAWING SE10 FOR THE COMMUNICATION DETAIL.

5. NEW PHOTOVOLTAIC SYSTEM UTILITY DISCONNECT SWITCH TO BE LOCATED CLOSE TO EXISTING METER PER UTILITY REQUIREMENTS.

6. SUBCONTRACTOR SHALL USE LOCK PROVIDED BY DISTRIBUTOR TO LOCK THE METERING AND SURGE PROTECTION CABINET.

7. SUBCONTRACTOR SHALL INSTALL SOLAREDGE FUSE KITS PROVIDED BY DISTRIBUTOR IN EACH INVERTER.

WARNING:
IT IS A VIOLATION OF THE NYS EDUCATION LAW ARTICLE 145 FOR ANY PERSON, UNLESS HE OR SHE IS ACTING UNDER THE DIRECTION OF A LICENSED PROFESSIONAL ENGINEER, TO ALTER THIS ITEM IN ANY WAY.

ISSUED FOR PERMITTING

THE DISTRIBUTION AND USE OF THE NATIVE FORMAT CAD FILE OF THIS DRAWING IS UNCONTROLLED. THE USER SHALL VERIFY TRACEABILITY OF THIS DRAWING TO THE LATEST CONTROLLED VERSION.

STATE OF NEW YORK · BRIAN CAULEY ROGERS · 103183 · LICENSED PROFESSIONAL ENGINEER
Date Signed: 08/16/2022
License Expires: 06/30/2023

| NO | DATE | REVISIONS AND RECORD OF ISSUE | DRN | DES | CHK | PDE | APP |
|---|---|---|---|---|---|---|---|
| 2 | 16/AUG/22 | ISSUED FOR PERMITTING - REVISED PER AHJ COMMENTS | AWC | AWC | BCR | BCR | BCR |
| 1 | 05/MAY/22 | ISSUED FOR PERMITTING - REVISED PER UTILITY COMMENTS | AWC | AWC | BCR | BCR | BCR |
| 0 | 22/APR/21 | ISSUED FOR PERMITTING | ASG | ASG | APN | BCR | BCR |

I HEREBY CERTIFY THAT THIS DOCUMENT WAS PREPARED BY ME OR UNDER MY DIRECT SUPERVISION AND THAT I AM A DULY REGISTERED PROFESSIONAL ENGINEER UNDER THE LAWS OF THE STATE OF NEW YORK
SIGNED BRIAN C. ROGERS
DATE 22/APR/21 REG NO. 103183

BLACK & VEATCH

DESIGNER ASG | DRAWN ASG | CHECKED APN | DATE 22/APR/21

J.P. MORGAN CHASE
1460 ROUTE 9, WAPPINGERS FALLS, NY 12590-4425

THREE LINE DIAGRAM AND BILL OF MATERIALS

PROJECT / DRAWING NUMBER: NY-150111-E20
REV: 2
CODE
AREA

ANSI D 34x22
02/14/2017 04:16 PM

| | | | CONDITIONS OF USE | | | | | | CONDUCTOR | EGC | CONDUIT | | | | CIRCUIT INFORMATION | | | | | | | |
|---|---|---|---|---|---|---|---|---|---|---|---|---|---|---|---|---|---|---|---|---|---|---|
| CIRCUIT ID | DESCRIPTION | NUMBER OF TYPICAL CIRCUITS | INSULATION TEMP. RATING | RACEWAY LOCATION | MODIFIED AMBIENT TEMPERATURE | # CURRENT CARRYING CONDUCTORS | CONDUIT FILL DERATE FACTOR | TEMPERATURE DERATE FACTOR | MINIMUM SPECIFICATION | MINIMUM SPECIFICATION | MIN SIZE | # OF CONDUCTORS | # OF EGC | CONDUIT FILL % | CONDUCTOR AMPACITY | CONDUCTOR DERATED AMPACITY | CONT. CURRENT | MAXIMUM CURRENT | OCPD | ESTIMATED CIRCUIT LENGTH | % VOLTAGE DROP | % AVERAGE LOSSES |
| 01 | STRING TO INVERTER (NOTE 1) | 3 | 90 °C | < 0.88" | 67 °C | 2 | 0.8 | 0.58 | 8 AWG, COPPER, PV WIRE | 10 AWG, COPPER, RHW-2 | 1.25", EMT | 6 | 1 | 33% | 55 A | 26 A | 15.0A | 18.8A | 20 | 176 FT | 1.03% | 1.03% |
| 02 | 14.4 KW INVERTER TO UTILITY DS | 1 | 90 °C | UNDER ROOF | 34 °C | 3 | 1 | 0.96 | 8 AWG, COPPER, THWN-2 | 10 AWG, COPPER, THWN-2 | 0.75", EMT | 4 | 1 | 31% | 55 A | 53 A | 40.0A | 50.0A | 50 | 10 FT | 0.26% | 0.26% |
| 03 | UTILITY DS TO POI | 1 | 90 °C | UNDER ROOF | 34 °C | 3 | 1 | 0.96 | 6 AWG, COPPER, THWN-2 | 10 AWG, COPPER, THWN-2 | 1.00", RMC | 4 | 1 | 25% | 75 A | 72 A | 40.0A | 50.0A | 50 | 25 FT | 0.41% | 0.41% |
| | | | | | | | | | | | | | | | | | | | | TOTAL | 1.70% | 1.70% |

| DESIGN PARAMETERS | |
|---|---|
| ASHRAE EXTREME LOW | -25.9 °C |
| ASHRAE 2% HIGH | 33.7 °C |
| SERVICE VOLTAGE | 208V, 3Φ |
| UTILITY | CENTRAL HUDSON |
| ELECTRICAL CODE | NEC 2017 |

| SYSTEM SUMMARY | |
|---|---|
| TOTAL DC POWER | 17,710 W |
| TOTAL AC POWER | 14,400 W |
| WEIGHTED ILR | 1.23 |
| INVERTER OUTPUT RATED VOLTAGE | 208 V |
| MAX AC CURRENT (208 V) | 40.0A |
| TRANSFORMATION VOLTAGE | 208 V |
| MAX AC CURRENT (208 V) | 40.0A |

| 120% CALCULATION PER 705.12(B)(2)(3)(B) | |
|---|---|
| PANEL BUS RATING | 400 A |
| MAIN SERVICE DISCONNECT RATING | 400 A |
| 125% INVERTER CURRENT | 50 A |
| SUM OF SUPPLY CURRENTS TO BUS | 400 A + 50 A = 450 A |
| 120% OF BUS RATING | 480 A |
| SUM OF SUPPLY CURRENTS MUST NOT EXCEED 120% OF BUS RATING | |

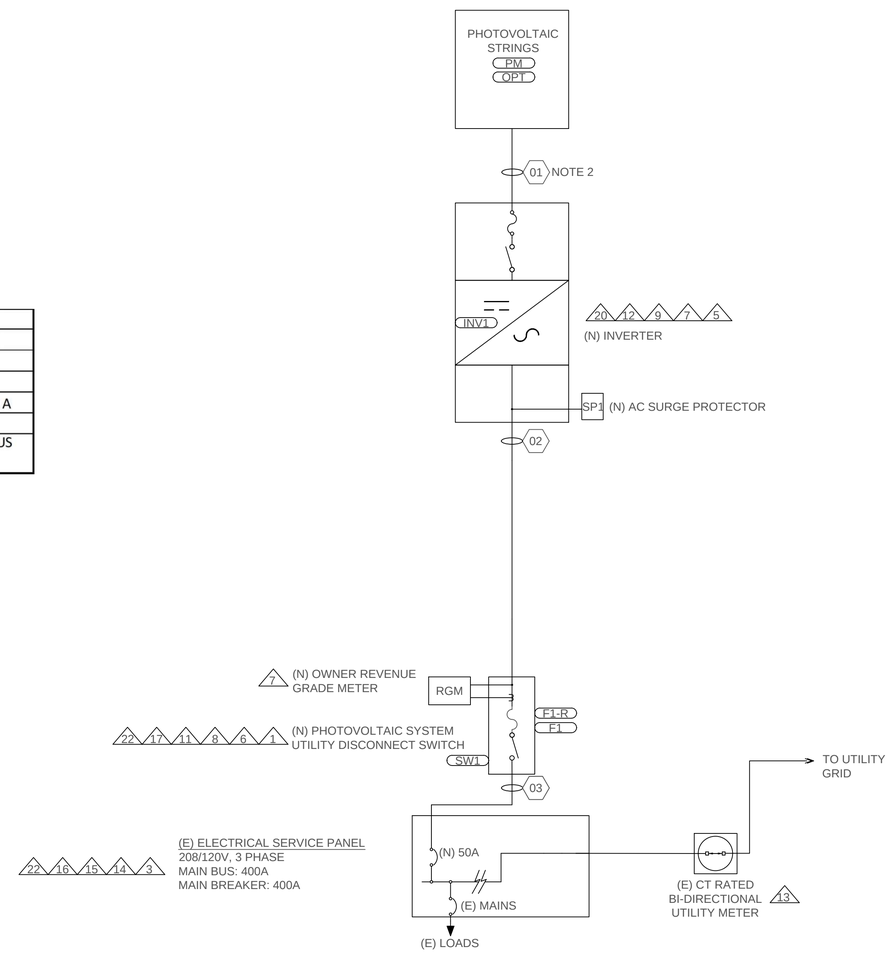


01 ONE LINE DIAGRAM
NOT TO SCALE

| | SYSTEM INFORMATION | | | | | | | DC WIRING LOSSES AT STC | | |
|---|---|---|---|---|---|---|---|---|---|---|
| | STRING INPUTS | MODULES IN SERIES | DC POWER (STC) | TOTAL DC POWER (STC) | INVERTER AC POWER | ILR | INVERTER OUTPUT CURRENT | ESTIMATED CIRCUIT LENGTH | % VOLTAGE DROP | % STC LOSS |
| INVERTER-1 | STRING 1-1 | 16 | 6,160 W | 17,710 W | 14,400 W | 1.23 | 40.0A | 189 | 1.13% | 1.13% |
| | STRING 1-2 | 16 | 6,160 W | | | | | 194 | 1.16% | 1.16% |
| | STRING 1-3 | 14 | 5,390 W | | | | | 144 | 0.75% | 0.75% |
| | | | | | | | WEIGHTED AVERAGE | | 1.03% | 1.03% |

| MODULE | |
|---|---|
| MAKE | MISSION SOLAR |
| MODEL | MSE385SR9S |
| POWER OUTPUT | 385 W |
| SHORT CIRCUIT Isc | 9.99 A |
| OPEN CIRCUIT VOLTAGE Voc | 48.53 V |
| RATED CURRENT Imp | 9.43 A |
| RATED VOLTAGE Vmp | 40.84 V |
| TEMPERATURE COEFFICIENT OF Voc | -0.28%/C |
| TEMPERATURE COEFFICIENT OF Isc | 0.045%/C |

| INVERTER | |
|---|---|
| MAKE | SOLAREDGE |
| MODEL | SE14.4KUS |
| MAXIMUM AC POWER OUTPUT | 14,400 W |
| AC RATED VOLTAGE | 208Y/120 V |
| MAX CONTINUOUS OUTPUT CURRENT | 40.0 A |
| RATED INPUT VOLTAGE | 400 V |
| MAXIMUM INPUT CURRENT | 38.0 A |
| MAXIMUM SHORT CIRCUIT CURRENT | 45.0 A |
| MAXIMUM INPUT VOLTAGE | 600 V |
| TRANSFORMER-LESS, UNGROUNDED | YES |

| OPTIMIZER | |
|---|---|
| MAKE | SOLAR EDGE |
| MODEL | P400 (3P) |
| RATED INPUT DC POWER | 400 W |
| MAXIMUM SYSTEM VOLTAGE | 1000 V |
| MAXIMUM OUTPUT CURRENT | 15.0 A |
| MAXIMUM OUTPUT VOLTAGE | 60 V |
| MAXIMUM INPUT VOLTAGE | 80 V |
| MAXIMUM SHORT CIRCUIT CURRENT | 10.1 A |
| MINIMUM MODULES IN SERIES | 10 |
| MAXIMUM MODULES IN SERIES | 18 |

DISTRIBUTOR BILL OF MATERIAL

| REF | CATEGORY | MAKE | MODEL | QTY | UNIT | DESCRIPTION |
|---|---|---|---|---|---|---|
| PM | MODULE | MISSION SOLAR | MSE385SR9S | 46 | EA | 385WP, 72 CELL SOLAR MODULE (PROVIDED BY JPMC) |
| OPT | DC OPTIMIZER | SOLAREDGE | P400 (3P) | 46 | EA | SOLAREDGE POWER OPTIMIZER |
| INV1 | 14.4KW INVERTER | SOLAREDGE | SE14.4KUS | 1 | EA | UTILITY INTERACTIVE DC-TO-AC INVERTER: 3-PHASE, 4-WIRE, 208/120VAC, NEMA 3R, NEC 2014 and 2017 RAPID SHUTDOWN COMPLIANT WITH FUSE KIT |
| CELL1 | CELLULAR CDMA KIT | SOLAREDGE | SE-CELL-B-R05-S-S4 | 1 | EA | CDMA MODEM W/SIM, INV≤33.3KVA, 5YRS, HB 15MIN |
| PNL2 | METERING AND SURGE PROTECTION CABINET | VARIES | DETAIL 01 | 1 | EA | REFER TO DRAWING SE20C FOR CABINET DESIGN AND BOM |
| SW1 | UTILITY DISCONNECT | EATON | DG324NRK | 1 | EA | 240VAC, 200A, 3 POLE GENERAL-DUTY,FUSIBLE, SINGLE-THROW DISCONNECT SWITCH, NEMA 3R |
| F1 | UTILITY DISCONNECT FUSE | BUSSMANN | FRN-R-50 | 3 | EA | FUSE, 50A, 250VAC, SCCR 200 kA |
| MISC1 | FUSED TERMINAL BLOCK | SOLAREDGE | DCD-3PH-6FHK-S1 | 1 | EA | POSITIVE AND NEGATIVE 25A FUSED TERMINAL BLOCKS |
| F1-R | FUSE REDUCER | BUSSMANN | 226-R | 3 | EA | 250V CLASS R FUSE REDUCER 35 TO 60A FOR 200A DISCONNECT |

LEGEND
(N) - NEW EQUIPMENT
(E) - EXISTING EQUIPMENT

# REFER TO E30 FOR PLACARD LABELING

NOTES:
1. REFER TO E20 FOR ADDITIONAL NOTES AND INFORMATION.
2. REFER TO E20 FOR ADDITIONAL DC CIRCUIT DETAILS.

WARNING:
IT IS A VIOLATION OF THE NYS EDUCATION LAW ARTICLE 145 FOR ANY PERSON, UNLESS HE OR SHE IS ACTING UNDER THE DIRECTION OF A LICENSED PROFESSIONAL ENGINEER, TO ALTER THIS ITEM IN ANY WAY.

STATE OF NEW YORK · BRIAN CAULEY ROGERS · 103183 · LICENSED PROFESSIONAL ENGINEER
Date Signed: 08/16/2022
License Expires: 06/30/2023

ISSUED FOR PERMITTING
THE DISTRIBUTION AND USE OF THE NATIVE FORMAT CAD FILE OF THIS DRAWING IS UNCONTROLLED. THE USER SHALL VERIFY TRACEABILITY OF THIS DRAWING TO THE LATEST CONTROLLED VERSION.

| NO | DATE | REVISIONS AND RECORD OF ISSUE | DRN | DES | CHK | PDE | APP |
|---|---|---|---|---|---|---|---|
| 2 | 16/AUG/22 | ISSUED FOR PERMITTING - REVISED PER AHJ COMMENTS | AWC | AWC | BCR | BCR | BCR |
| 1 | 05/MAY/22 | ISSUED FOR PERMITTING - REVISED PER UTILITY COMMENTS | AWC | AWC | BCR | BCR | BCR |
| 0 | 22/APR/21 | ISSUED FOR PERMITTING | ASG | ASG | APN | BCR | BCR |

I HEREBY CERTIFY THAT THIS DOCUMENT WAS PREPARED BY ME OR UNDER MY DIRECT SUPERVISION AND THAT I AM A DULY REGISTERED PROFESSIONAL ENGINEER UNDER THE LAWS OF THE STATE OF NEW YORK
SIGNED BRIAN C. ROGERS
DATE 22/APR/21 REG NO. 103183

BLACK & VEATCH

| DESIGNER | DRAWN |
|---|---|
| ASG | ASG |
| CHECKED | DATE |
| APN | 22/APR/21 |

J.P. MORGAN CHASE
1460 ROUTE 9, WAPPINGERS FALLS, NY 12590-4425

ONE LINE DIAGRAM

PROJECT NY-150111-E21
DRAWING NUMBER
REV 2
CODE
AREA

ANSI D 34x22
02/14/2017 04:16 PM

**! DANGER !**

ARC FLASH AND SHOCK HAZARD PRESENT
DO NOT OPEN DOOR WHILE ENERGIZED
INCIDENT ENERGY EXCEEDS MAX PPE PROTECTION

AT EACH PHOTOVOLTAIC SYSTEM SERVICE DISCONNECT SWITCH.

1

**! WARNING !**

ARC FLASH HAZARD.
APPROPRIATE PPE REQUIRED.
FAILURE TO COMPLY MAY RESULT IN INJURY OR DEATH.
REFER TO NFPA 70 E.

AT EACH AC DEDICATED PHOTOVOLTAIC SYSTEM COMBINER PANEL AND DISCONNECT.
[NEC 110.16]

2

**! WARNING !**

TURN OFF PHOTOVOLTAIC AC DISCONNECT PRIOR TO WORKING INSIDE PANEL

AT EACH BREAKER PANEL AND MAIN SERVICE DISCONNECT.
[NEC 110.27(C)]

3

DIRECT CURRENT
PHOTOVOLTAIC POWER SOURCE

| | |
|---|---|
| MAXIMUM VOLTAGE: | 600 V |
| MAX CIRCUIT CURRENT: | 45 A |

AT EACH 14.4 KW INVERTER DC DISCONNECTING MEANS
[NEC 690.53]

20

**SOLAR PV SYSTEM EQUIPPED WITH RAPID SHUTDOWN**

TURN RAPID SHUTDOWN SWITCH TO THE "OFF" POSITION TO SHUTDOWN PV SYSTEM AND REDUCE SHOCK HAZARD IN ARRAY


AT SYSTEM'S RAPID SHUTDOWN
[NEC 690.56(C)].

5

**! WARNING !**

ELECTRIC SHOCK HAZARD
TERMINALS ON BOTH LINE AND LOAD SIDES MAY BE ENERGIZED IN THE OPEN POSITION

AT EACH AC DISCONNECTING MEANS FOR PHOTOVOLTAIC EQUIPMENT
[NEC 690.13(B)]

6

**! WARNING !**

PHOTOVOLTAIC SYSTEM DATA ACQUISITION SYSTEM
AUTHORIZED PERSONNEL ONLY

THE PV DAS SHALL BE LABELED WITH THE FOLLOWING INFORMATION

7

**PHOTOVOLTAIC AC DISCONNECT**

| | |
|---|---|
| RATED OPERATING AC CURRENT: | 40.0A |
| NOMINAL OPERATING AC VOLTAGE: | 208V, 3Φ |

AT POINT OF INTERCONNECTION, MARKED AT DISCONNECTING MEANS
[NEC 690.54]

8

INTERACTIVE PHOTOVOLTAIC SYSTEM CONNECTED
PHOTOVOLTAIC SYSTEM DISCONNECT LOCATED EAST SIDE OF THE BUILDING

PLAQUE

**! WARNING !**
**ELECTRIC SHOCK HAZARD**

TERMINALS ON THE LINE AND LOAD SIDES MAY BE ENERGIZED IN THE OPEN POSITION.
DC VOLTAGE IS ALWAYS PRESENT WHEN SOLAR MODULES ARE EXPOSED TO SUNLIGHT

AT EACH DC DISCONNECTING MEANS FOR PHOTOVOLTAIC EQUIPMENT
[NEC 690.13(B)]

9

**PHOTOVOLTAIC SYSTEM SERVICE DISCONNECT SWITCH**

AT PHOTOVOLTAIC SYSTEM SERVICE DISCONNECT SWITCH [NEC 690.13(B)]

10

**PHOTOVOLTAIC SYSTEM UTILITY DISCONNECT SWITCH**

AT PHOTOVOLTAIC SYSTEM UTILITY DISCONNECT SWITCH [NEC 690.13(B)]

11

**PHOTOVOLTAIC DC DISCONNECT**

AT EACH DC DISCONNECTING MEANS
[NEC 690.13(B)]

12

PHOTOVOLTAIC SYSTEM METER INTERACTIVE PHOTOVOLTAIC SYSTEM CONNECTED

AT UTILITY METER
[NEC 690.56(B)]

13

**!CAUTION!**

POWER TO THIS BUILDING IS ALSO SUPPLIED FROM ROOF MOUNTED SOLAR ARRAYS WITH SAFETY DISCONNECTS AS SHOWN:

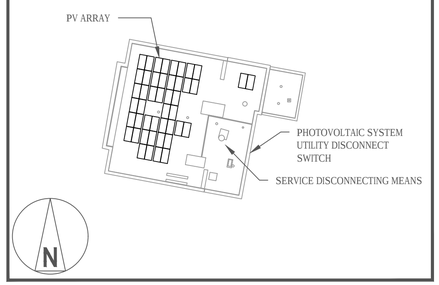


AT THE SERVICE ENTRANCE (ELECTRICAL SERVICE PANEL) AND PHOTOVOLTAIC SYSTEM SERVICE DISCONNECT SWITCH

22

DIRECTORY

PERMANENT PLAQUE OR DIRECTORY PROVIDING THE LOCATION OF THE SERVICE DISCONNECTING MEANS AND THE PHOTOVOLTAIC SYSTEM DISCONNECTING MEANS IF NOT IN THE SAME LOCATION
[NEC 690.56(B)]
WHERE THE PV SYSTEMS ARE REMOTELY LOCATED FROM EACH OTHER, A DIRECTORY IN ACCORDANCE WITH 705.10 SHALL BE PROVIDED AT EACH PV SYSTEM DISCONNECTING MEANS [NEC 690.4(D)]
PV SYSTEM EQUIPMENT AND DISCONNECTING MEANS SHALL NOT BE INSTALLED IN BATHROOMS. [NEC 690.4(E)]

**! WARNING !**

POWER SOURCE OUTPUT CONNECTION. DO NOT RELOCATE THIS OVERCURRENT DEVICE

AT EACH DISTRIBUTION EQUIPMENT ADJACENT TO THE BACK-FED BREAKER FROM THE POWER SOURCE.
[NEC 705.12(B)(2)(3)(B)]

14

**! WARNING !**

DUAL POWER SOURCES.
SECOND SOURCE IS PV SYSTEM

AT POINT OF INTERCONNECTION; LABEL MUST IDENTIFY PHOTOVOLTAIC SYSTEM
[NEC 705.12(B)(3)]

15

**! CAUTION !**

PHOTOVOLTAIC SYSTEM CIRCUIT IS BACKFED

AT POINT OF INTERCONNECTION; LABEL MUST IDENTIFY PHOTOVOLTAIC SYSTEM
[NEC 705.12(B)(3)]

16

**RAPID SHUTDOWN SWITCH FOR SOLAR PV SYSTEM**

AT RAPID SHUTDOWN SWITCH
[NEC 690.56(C)].
LETTERS AT LEAST 3/8 INCH; WHITE ON RED BACKGROUND; REFLECTIVE [IFC 605.11.1.1].
LABEL LOCATED ON OR NO MORE THAN 1 METER (3.3 FT.) FROM THE SWITCH.

17

WARNING: PHOTOVOLTAIC POWER SOURCE

AT EXPOSED RACEWAYS, CABLE TRAYS, AND OTHER WIRING METHODS; SPACED AT MAXIMUM 10 FT SECTION OR WHERE SEPARATED BY ENCLOSURES, WALLS, PARTITIONS, CEILINGS, OR FLOORS.
[NEC 690.31(G)]
LETTERS AT LEAST 3/8 INCH; WHITE ON RED BACKGROUND; REFLECTIVE
[IFC 605.11.1.1]

21

**DEDICATED PHOTOVOLTAIC SYSTEM COMBINER PANEL DO NOT ADD LOADS TO THIS PANEL**

AT DEDICATED PHOTOVOLTAIC SYSTEM COMBINER PANEL (IF APPLICABLE)

18

**NET GENERATION OUTPUT METER**

AT NET GENERATION OUTPUT METER

19

**! WARNING !**

A GENERATION SOURCE IS CONNECTED TO THE SUPPLY (UTILITY) SIDE OF THE SERVICE DISCONNECTING MEANS. FOLLOW PROPER LOCKOUT/TAGOUT PROCEDURES TO ENSURE THE PHOTOVOLTAIC SYSTEM UTILITY DISCONNECT SWITCH IS OPENED PRIOR TO PERFORMING WORK ON THE DEVICE.

AT THE ELECTRICAL SERVICE PANEL

4

WARNING:
IT IS A VIOLATION OF THE NYS EDUCATION LAW ARTICLE 145 FOR ANY PERSON, UNLESS HE OR SHE IS ACTING UNDER THE DIRECTION OF A LICENSED PROFESSIONAL ENGINEER, TO ALTER THIS ITEM IN ANY WAY.

ISSUED FOR PERMITTING

THE DISTRIBUTION AND USE OF THE NATIVE FORMAT CAD FILE OF THIS DRAWING IS UNCONTROLLED. THE USER SHALL VERIFY TRACEABILITY OF THIS DRAWING TO THE LATEST CONTROLLED VERSION.

STATE OF NEW YORK · BRIAN CAULEY ROGERS · 103183 · LICENSED PROFESSIONAL ENGINEER
Date Signed: 08/16/2022
License Expires: 06/30/2023

LABELING NOTES
1.1 LABELING REQUIREMENTS BASED ON THE 2017 NATIONAL ELECTRICAL CODE, INTERNATIONAL FIRE CODE 605.11, OSHA STANDARD 1910.145, ANSI Z535
1.2 MATERIAL BASED ON THE REQUIREMENTS OF THE AUTHORITY HAVING JURISDICTION.
1.3 LABELS TO BE OF SUFFICIENT DURABILITY TO WITHSTAND THE ENVIRONMENT FOR WHICH THEY ARE INSTALLED.
1.4 LABELS TO BE A MINIMUM LETTER HEIGHT OF 3/8" AND PERMANENTLY AFFIXED.
1.5 ALERTING WORDS TO BE COLOR CODED. "DANGER" WILL HAVE RED BACKGROUND; "WARNING" WILL HAVE ORANGE BACKGROUND; "CAUTION" WILL HAVE YELLOW BACKGROUND. [ANSI Z535]

| NO | DATE | REVISIONS AND RECORD OF ISSUE | DRN | DES | CHK | PDE | APP |
|---|---|---|---|---|---|---|---|
| 2 | 16/AUG/22 | ISSUED FOR PERMITTING - REVISED PER AHJ COMMENTS | AWC | AWC | BCR | BCR | BCR |
| 1 | 05/MAY/22 | ISSUED FOR PERMITTING - REVISED PER UTILITY COMMENTS | AWC | AWC | BCR | BCR | BCR |
| 0 | 22/APR/21 | ISSUED FOR PERMITTING | ASG | ASG | APN | BCR | BCR |

I HEREBY CERTIFY THAT THIS DOCUMENT WAS PREPARED BY ME OR UNDER MY DIRECT SUPERVISION AND THAT I AM A DULY REGISTERED PROFESSIONAL ENGINEER UNDER THE LAWS OF THE STATE OF NEW YORK
SIGNED BRIAN C. ROGERS
DATE 22/APR/21 REG NO. 103183

BLACK & VEATCH

| | |
|---|---|
| DESIGNER ASG | DRAWN ASG |
| CHECKED APN | DATE 22/APR/21 |

J.P. MORGAN CHASE
1460 ROUTE 9, WAPPINGERS FALLS, NY 12590-4425

PLACARDS

| PROJECT | DRAWING NUMBER | REV |
|---|---|---|
| | NY-150111-E30 | 2 |
| CODE | | |
| AREA | | |

ANSI D 34x22
02/14/2017 04:16 PM

# J.P. MORGAN CHASE
# ROOFTOP SOLAR PROGRAM
# TRANCHE 10 - NEW YORK

# STANDARD DRAWING PACKAGE

WARNING:
IT IS A VIOLATION OF THE NYS EDUCATION LAW ARTICLE 145 FOR ANY PERSON, UNLESS HE OR SHE IS ACTING UNDER THE DIRECTION OF A LICENSED PROFESSIONAL ENGINEER, TO ALTER THIS ITEM IN ANY WAY.

## APPROVED FOR CONSTRUCTION

THE DISTRIBUTION AND USE OF THE NATIVE FORMAT CAD FILE OF THIS DRAWING IS UNCONTROLLED. THE USER SHALL VERIFY TRACEABILITY OF THIS DRAWING TO THE LATEST CONTROLLED VERSION.

STATE OF NEW YORK
BRIAN CAULEY ROGERS
103183
LICENSED PROFESSIONAL ENGINEER

Date Signed: 03/24/2022
License Expires: 06/30/2023

| NO | DATE | REVISIONS AND RECORD OF ISSUE | DRN | DES | CHK | PDE | APP |
|---|---|---|---|---|---|---|---|
| 1 | 24/MAR/22 | APPROVED FOR CONSTRUCTION | IJR | IJR | NST | BCR | BCR |
| 0 | 15/APR/21 | ISSUED FOR PERMITTING | WS | JKT | NST | BCR | BCR |

I HEREBY CERTIFY THAT THIS DOCUMENT WAS PREPARED BY ME OR UNDER MY DIRECT SUPERVISION AND THAT I AM A DULY REGISTERED PROFESSIONAL ENGINEER UNDER THE LAWS OF THE STATE OF NEW YORK.

SIGNED BRIAN C. ROGERS
DATE 15/APR/21 REG NO. 103183

BLACK & VEATCH
BLACK & VEATCH NEW YORK, LLP
11404 LAMAR AVE, OVERLAND PARK, KS 66211
CERTIFICATE OF AUTHORIZATION NO. 0018348 EXP: 12/2023

DESIGNER JKT | DRAWN WS
CHECKED NST | DATE 15/APR/21

J.P. MORGAN CHASE
TRANCHE 10 - NEW YORK

COVER PAGE

PROJECT: NY-STNDRD-SG10
DRAWING NUMBER
REV: 1
CODE
AREA

ANSI D 34x22
02/14/2017 04:16 PM

1.0 GENERAL NOTES:

A. FOLLOWING DEFINITIONS APPLY TO THE CONSTRUCTION DRAWINGS:
   1. CONTRACTOR: SUBCONTRACTOR INSTALLING PHOTOVOLTAIC (PV) SOLAR SYSTEM
   2. ENGINEER: BLACK & VEATCH
   3. CONSTRUCTION MANAGER: BLACK & VEATCH
   4. OWNER: J.P. MORGAN CHASE
   5. OWNERS REPRESENTATIVE: CBRE, JLL OR SMS
   6. AUTHORITY HAVING JURISDICTION (AHJ): SEE DWG. G10

B. CONTRACTOR'S WORK SHALL INCLUDE ALL LABOR, MATERIALS, EQUIPMENT, ETC. NECESSARY AND REASONABLY INCIDENTAL TO COMPLETE PROJECT. IF NOT DEFINED THIS SHALL BE BROUGHT TO THE ENGINEERS ATTENTION. USE MATERIALS IN NEW AND UNUSED CONDITION AND OF HIGH QUALITY IN EVERY RESPECT.

C. DETAILS SURROUNDING RULES AND REGULATIONS WHILE WORKING ON BANK PREMISES SHALL FOLLOW SUBCONTRACT ARTICLE 00664.3 OWNER'S JOBSITE POLICIES AND PROCEDURES, AS WELL AS ANY OTHER JOBSITE PROCEDURES REFERENCED WITHIN THE SUBCONTRACT DOCUMENTS.

D. PV MODULES ARE ENERGIZED AND CAN GENERATE ELECTRICITY WHEN THE MODULES ARE EXPOSED TO SUNLIGHT, EVEN IF THEY ARE NOT CONNECTED. ALL PERSONNEL WORKING WITH ALL EQUIPMENT, COMPONENTS OR ASSOCIATED DEVICES MUST COMPLY WITH ALL RELEVANT SAFETY PRECAUTIONS AS IDENTIFIED BY THE MANUFACTURES INSTALLATION SAFETY GUIDE AND WITH OSHA STANDARDS AND REQUIREMENTS.

E. MATERIAL AND WORKMANSHIP SHALL COMPLY WITH ALL APPLICABLE CODES, REGULATIONS, LAWS AND ORDINANCES.

F. CONTRACTOR SHALL REVIEW ALL CONSTRUCTION DRAWINGS, MANUFACTURER INSTALLATION MANUAL, SAFETY MANUAL AND WALK–DOWN THE SITE TO VERIFY ALL EXISTING CONDITIONS AND NOTIFY THE ENGINEER OF ANY DISCREPANCIES OR CONFLICTS PRIOR TO STARTING WORK.

G. PLANS ARE INTENDED FOR DIAGRAMMATIC OUTLINE AND NOT TO SCALE. ALL EQUIPMENT SHALL BE INSTALLED WITH PROPER ACCESS AND WORKING CLEARANCES PER NEC 110.26. ALL EQUIPMENT AND MATERIALS SHALL BE INSTALLED IN ACCORDANCE WITH THE MANUFACTURES RECOMMENDATIONS UNLESS SPECIFICALLY NOTED OTHERWISE. ALTERNATE INSTALLATION LAYOUT MUST BE PROVIDED FOR APPROVAL BY THE ENGINEER IF INSTALLATION CANNOT PROCEED AS SHOWN.

H. CONTRACTOR IS RESPONSIBLE FOR SITE SECURITY AND SAFETY OF WORK AREA, ADJACENT AREAS AND BUILDING OCCUPANTS. WORK SHALL CONFORM TO ALL OSHA AND LOCAL AHJ REQUIREMENTS.

I. PROTECT EXISTING PAVEMENTS, CURBS, LANDSCAPING, STRUCTURES AND UTILITY SERVICES WITHIN CONSTRUCTION AREA. DAMAGE TO EXISTING FACILITIES CAUSED BY ANY CONSTRUCTION ACTIVITY SHALL BE REPAIRED AT CONTRACTOR'S EXPENSE.

J. CONTRACTOR SHALL MAINTAIN A CLEAN AND ORDERLY SITE TO MINIMIZE DISTURBANCE OF EXISTING SITE DURING CONSTRUCTION. REMOVE AND DISPOSE TRASH, DEBRIS AND OTHER REFUSE FROM SITE DAILY IN COMPLIANCE WITH ALL LAWS, REGULATIONS AND LOCAL AHJ ORDINANCES.

K. MAINTAIN ONE COMPLETE SET OF PLANS, WITH ALL REVISIONS, ON THE JOBSITE. RETURN FINAL, AS–BUILT COMMENTS TO ENGINEER.

L. ORIGINAL BROCHURES, OPERATING AND MAINTENANCE MANUALS, CATALOGS, SHOP DRAWING, AND OTHER DOCUMENTS SHALL BE TURNED OVER TO OWNER AT COMPLETION OF CONSTRUCTION.

M. PERMISSION TO OPERATE THE SYSTEM IS NOT GRANTED UNTIL THE SOLAR SYSTEM HAS BEEN INSPECTED BY THE APPROPRIATE ELECTRICAL INSPECTOR, BUILDING INSPECTOR, AND UTILITY PERSONNEL.

N. AT NO TIME SHALL IT BE ACCEPTABLE TO WALK ON, SIT ON, REST ON, OR DROP MODULES. ANY TIME THAT THIS IS DONE THE CONTRACTOR WILL BE RESPONSIBLE FOR REPLACEMENT COST OF THE MODULES.

2.0 STRUCTURAL NOTES:

A. INSTALL RACKING SYSTEM, PV MODULES, GROUNDING AND ACCESSORIES IN ACCORDANCE WITH MANUFACTURER'S INSTALLATION MANUAL AND INDUSTRY BEST PRACTICES.

B. COMPLETELY FLASH AND SEAL RACKING AND CONDUIT PITCHED ROOF ATTACHMENTS WITH CHEMLINK M–1 SEALANT OR ACCEPTABLE EQUAL. FOR U–ANCHOR PRODUCT APPLICATIONS, USE ROOFING MANUFACTURER APPROVED CLEANER, PRIMER, ADHESIVE, AND/OR SEALANT IN ACCORDANCE WITH ANCHOR PRODUCTS SPECIFICATIONS.

C. EXERCISE DUE CAUTION TO MINIMIZE UNNECESSARY ROOF ATTACHMENTS. ANY ROOF DAMAGE OR LEAKS CAUSED BY THE PV CONSTRUCTION, SHALL BE REPAIRED AT CONTRACTOR'S EXPENSE. REPAIR SHALL MATCH EXISTING CONDITIONS.

D. DO NOT CAUSE OBSTRUCTION TO ANY ROOF DRAINS OR SCUPPERS, NOR PLUMBING, MECHANICAL, OR BUILDING VENTS.

E. THE EXISTING BUILDING COMPONENTS MAY CONTAIN ASBESTOS. THE CONTRACTOR SHALL NOTIFY ENGINEER FOR DIRECTION AND STOP WORK IF ASBESTOS ENCOUNTERED.

F. THE EXISTING STRUCTURAL STEEL COATING MAY CONTAIN LEAD. THE CONTRACTOR SHALL NOTIFY ENGINEER FOR DIRECTION AND STOP WORK IF LEAD ENCOUNTERED.

G. WOOD MATERIALS FIELD WORKMANSHIP, CONSTRUCTION BEST PRACTICES, AND INSPECTION CRITERIA TO BE IN ACCORDANCE WITH NDS "NATIONAL DESIGN SPECIFICATION", LATEST EDITION.

H. STEEL MATERIALS FIELD WORKMANSHIP, CONSTRUCTION BEST PRACTICES, AND INSPECTION CRITERIA TO BE IN ACCORDANCE WITH AISC "STEEL CONSTRUCTION MANUAL", LATEST EDITION.

I. CONTRACTOR SHALL REMOVE ALL EXISTING STORED MATERIALS FROM ROOFTOP PRIOR TO ROOF INSTALLATION AND COORDINATE WITH ONSITE OWNER REPRESENTATIVE TO IDENTIFY A MORE APPROPRIATE STORAGE LOCATION. FOLLOWING INSTALLATION OF SOLAR MODULES, OWNER SHALL BE RESPONSIBLE FOR ENSURING MATERIALS ARE NOT STORED ON ROOFTOP.

J. OWNER SHALL BE RESPONSIBLE FOR ENSURING THAT ROOF DRAINS AND SCUPPERS ARE IN PROPER WORKING ORDER AND ARE FUNCTIONING AS INTENDED PRIOR TO AND AFTER SOLAR MODULE INSTALLATION.

3.0 INTERCONNECTION NOTES:

A. SUPPLY SIDE INTERCONNECTIONS ARE PERMITTED; THESE CONNECTIONS SHALL COMPLY WITH NEC 705.12(A). SERVICE ENTRANCE CONDUCTORS FOR A SUPPLY SIDE TAP INTERCONNECTION SHALL COMPLY WITH NEC 230.42.

B. LOAD SIDE INTERCONNECTIONS ARE ALSO PERMITTED; THESE CONNECTIONS SHALL COMPLY WITH NEC 705.12(B)(1) THRU (B)(5).

4.0 ELECTRICAL DESIGN AND EQUIPMENT REQUIREMENTS

4.1 RACEWAYS

A. DESIGN, FURNISH AND INSTALL RACEWAY COMPONENTS AS A COMPLETE ELECTRICAL SYSTEM AS REQUIRED BY APPLICABLE CODES AND AS SPECIFIED HEREIN. OWNER'S REPRESENTATIVE SHALL APPROVE ROUTE OF ANY EXPOSED RACEWAY OR CONDUIT ON BUILDING ROOF AND FACADE.

B. ELECTRICAL METALLIC TUBING (EMT) CONDUIT SHALL MEET THE FOLLOWING REQUIREMENTS:
   1. GALVANIZED WITH CORROSION PROTECTION
   2. LISTED TO UL 797 AND UL 514B
   3. CONFORM TO ANSI C80.3
   4. MINIMUM SIZE 3/4 IN.
   5. ALL FITTINGS SHALL BE COMPRESSION TYPE NON–INSULATED WITH GASKETED SEALS
   6. NEC ARTICLE 358
   7. ALL FITTINGS TERMINATED AT EQUIPMENT/PANELS SHALL BE RAINTIGHT WITH LOW POINT DRAINS.

C. RIGID METAL CONDUIT (RMC) SHALL MEET THE FOLLOWING REQUIREMENTS:
   1. GALVANIZED WITH CORROSION PROTECTION
   2. LISTED TO UL 6 AND UL 514B
   3. CONFORM TO ANSI C80.5
   4. MINIMUM SIZE 3/4 IN.
   5. ALL FITTINGS SHALL BE COMPRESSION TYPE NON–INSULATED WITH GASKETED SEALS
   6. NEC ARTICLE 344
   7. ALL FITTINGS TERMINATED AT EQUIPMENT/PANELS SHALL BE RAINTIGHT WITH LOW POINT DRAINS.

D. LIQUID TIGHT FLEXIBLE METALLIC CONDUIT (LFMC) SHALL MEET THE FOLLOWING REQUIREMENTS:
   1. HOT DIPPED GALVANIZED STEEL CORE
   2. FLAME RETARDANT PVC JACKET
   3. SUNLIGHT OR UV RESISTANT
   4. MOSITURE AND OIL RESISTANT
   5. LISTED TO UL 360 AND UL 514B
   6. MINIMUM SIZE 1/2 IN.
   7. ALL FITTINGS TERMINATED AT EQUIPMENT/PANELS SHALL BE RAINTIGHT WITH LOW POINT DRAINS

E. ALUMINUM CONDUIT SHALL BE USED IN LOCATIONS WITHIN 2 MILES OF A BODY OF SALT WATER.
   1. LISTED TO UL 797A AND UL 514B
   2. ALL FITTINGS FOR ALUMINUM CONDUIT SHALL BE COPPER FREE ALUMINUM OR ALUMINUM ALLOY
   3. SHALL NOT BE ENCASED IN CONCRETE

4.2 GROUNDING SYSTEMS

A. DESIGN, FURNISH AND INSTALL GROUNDING SYSTEM COMPONENTS AS REQUIRED BY NEC, NESC, IEEE, LOCAL AHJ CODES AND MANUFACTURERS REQUIREMENTS.

B. ALL GROUNDING SYSTEMS SHALL COMPLY WITH THE FOLLOWING:
   1. DESIGN SYSTEM, CONSISTING OF BARE COPPER CONDUCTOR TO PROTECT PERSONNEL AND EQUIPMENT AT THE FACILITY FROM HAZARDS THAT OCCUR DURING POWER SYSTEM FAULTS AND LIGHTNING STRIKES.
   2. MODULE DC SYSTEM GROUNDING ELECTRODE(S) SHALL BE COMMON WITH, OR BONDED TO, AC GROUNDING ELECTRODE, AS INDICATED IN NEC 690.
   3. MODULES SHALL BE GROUNDED TO MEET ALL UL 2703 STANDARDS AND APPLICABLE CODES. GROUND METAL PARTS OF MODULE FRAMES, RACKING AND ENCLOSURES THAT ARE CONSIDERED GROUNDED IN ACCORDANCE WITH NEC 250.134 AND 250.136(A). BOND EACH MODULE TO RACKING USING WEEB GROUNDING CLIPS OR OTHER RACKING SPECIFIC FEATURES AS SHOWN IN MANUFACTURER DOCUMENTATION AND APPROVED BY THE AHJ.
   4. GROUND PV EQUIPMENT IN ACCORDANCE WITH NEC 690.43 AND AS A MINIMUM NEC TABLE 250.122.
   5. SIZE EQUIPMENT GROUNDING CONDUCTORS IN ACCORDANCE WITH NEC 690.45 AND SOLAREDGE INSTRUCTIONS.
   6. ARRANGE GROUNDING CONNECTION TO A MODULE SUCH THAT REMOVAL OF A MODULE DOES NOT INTERRUPT A GROUNDING CONDUCTOR TO ANOTHER MODULE.
   7. GROUND-FAULT DETECTION SHALL COMPLY WITH NEC 690.5.

4.2.1 GROUND LUGS

A. USE SINGLE–HOLE OR TWO–HOLE GROUND COMPRESSION LUGS, TYPE YGHA AS MANUFACTURED BY BURNDY ELECTRICAL, OR AN ENGINEER ACCEPTABLE EQUAL. LUGS SHALL BE OF THE COMPATIBLE WITH CONDUCTOR MATERIAL TO ELIMINATE DISSIMILAR METAL CORROSION ISSUE.

4.3 POWER AND CONTROL WIRING

A. SELECT CABLES WITH AN INSULATION LEVEL APPLICABLE TO SYSTEM VOLTAGE FOR WHICH THEY ARE USED AND AMPACITIES SUITABLE FOR LOAD BEING SERVED.

B. DETERMINE TYPE OF CABLE USED BY INDIVIDUAL CIRCUIT REQUIREMENTS, TEMPERATURE AND INDIVIDUAL EQUIPMENT MANUFACTURER'S RECOMMENDATIONS.

4.3.1 DC POWER CABLE

A. LIST AND IDENTIFY DC CONDUCTORS IN GROUNDED AND UNGROUNDED SYSTEMS AS 1,000 V RATED PV WIRE. CONDUCTORS SHALL MEET UL 4703 AND UL 854 REQUIREMENTS. CONDUCTOR SHALL BE RATED 90° C FOR WET OR DRY LOCATIONS AND BE UV RESISTANT.

B. WIRE TYPE SHALL BE RATED AS UV RESISTANT PV WIRE, INSULATED OR JACKETED WITH CROSS–LINKED POLYETHYLENE (XLPE). USE BLACK INSULATION ONLY.

C. USE STRANDED COPPER CONDUCTORS.

4.3.2 LOW VOLTAGE AC POWER CABLE

A. USE COPPER CONDUCTORS.

B. USE UL LISTED POWER AND CONTROL CABLES.

C. LIST AND IDENTIFY AS 600 V RATED THWN–2. CONDUCTORS SHALL MEET UL 83 AND ICEA S–95–658 (NEMA WC 70) REQUIREMENTS. CONDUCTOR SHALL BE RATED 90° C FOR WET OR DRY LOCATIONS AND BE UV RESISTANT.

4.3.3 RS–485 COMMUNICATION CABLE

A. RS–485 COMMUNICATION CABLE SHALL MEET THE FOLLOWING REQUIREMENTS:
   1. UV, OIL AND GAS RESISTANT
   2. INDUSTRIAL GRADE
   3. STRANDED TINNED COPPER CONDUCTOR
   4. POLYOLEFIN INSULATION
   5. PVC JACKET, 0.03 IN.
   6. UL LISTED
   7. OPERATING TEMPERATURE OF –20° C TO 60° C
   8. MINIMUM 3–WIRE SHIELDED TWISTED PAIR CABLE
   9. WET LOCATION UV RESISTANT
   10. BELDEN 3106A, OR AN EQUIVALENT APPROVED BY ENGINEER

4.3.4 CURRENT TRANSFORMER WIRE

A. THE CT LEADS SHALL BE EXTENDED WHERE THE STANDARD CT LEADS ARE NOT LONG ENOUGH. REFER TO CONTINENTAL CONTROL SYSTEMS LLC CT WIRE EXTENSION APPLICATION NOTE. THE EXTENSION WIRES SHALL MEET THE FOLLOWING REQUIREMENTS:
   1. MINIMUM 18 AWG
   2. TWISTED PAIR, 1 TWIST PER INCH
   3. 600V RATED
   4. LISTED TO UL 1015

4.4 JUNCTION BOXES (IF REQUIRED)

A. USE NEMA 3R OR 4 OUTDOOR BOXES, AS REQUIRED, WITH REMOVABLE INTERIOR PANEL AND REMOVABLE FRONT, FINISHED INSIDE AND OUT WITH MANUFACTURER'S STANDARD ENAMEL. USE NEMA 4X IN LOCATIONS WITHIN 2 MILES OF A BODY OF SALT WATER.

B. SIZE BOXES IN ACCORDANCE WITH MINIMUM NEC REQUIREMENTS.

5.0 ELECTRICAL INSTALLATION REQUIREMENTS

A. CONTRACTOR IS RESPONSIBLE FOR CONSTRUCTION OF A FULLY OPERATIONAL AND FUNCTIONAL FACILITY AS SHOWN ON THE DRAWINGS, UNLESS OTHERWISE APPROVED BY ENGINEER.

5.1 RACEWAYS

A. SEPARATE CONDUCTORS BY VOLTAGE AS REQUIRED BY APPLICABLE NEC AND LOCAL AHJ CODES AND STANDARDS. CONDUCTOR SHALL BE IN CONDUIT WHEN NOT UNDER SOLAR MODULES ALONG RACKING.

B. INSTALL CONDUITS AS FOLLOWS:
   1. CONDUIT SHALL BE INSTALLED IN A NEAT AND WORKMAN LIKE MANNER. CONDUIT ROUTING SHALL FOLLOW DOMINATE SURFACES AND STRUCTURES. ROUTING SHALL BE AS INCONSPICUOUS AS POSSIBLE.
   2. LIMIT THE NUMBER OF 90 DEGREE BENDS IN CONDUIT TO 3 FOR THE PURPOSE OF MAINITAINING ABILITY TO PULL CABLES WITHOUT DAMAGE.
   3. LIMIT THE NUMBER OF TIMES THAT CONDUIT CROSSES PATHWAY BETWEEN SEPERATED ARRAYS.
   4. EMT SHALL BE USED ABOVE GRADE ONLY.
   5. CONCRETE ENCASE WHERE SUBJECT TO VEHICLE TRAFFIC, AS SHOWN ON DRAWINGS.
   6. CONFORM SWEEPS AND RADIUS BENDS TO THE NEC FOR EACH TYPE OF CONDUIT AND SIZE, AS APPLICABLE.
   7. COUPLINGS THAT TRANSITION FROM ONE TYPE OF CONDUIT TO ANOTHER SHALL BE RAINTIGHT AND COMPATIBLE WITH ALL MATERIALS IN CONTACT WITH COUPLINGS.
   8. PROTECT CONDUCTORS WITH AN INSULATING BUSHING WHERE CONDUIT TERMINATES IN A CABINET OR BOX. INSULATING FITTING SHALL BE SUITABLE FOR BONDING TO GROUND IN ACCORDANCE WITH NEC 250.92.
   9. CONDUIT FIELD CUTS SHALL BE COATED WITH ZINCILATE 810, OR AN EQUIVALENT APPROVED BY ENGINEER.
   10. IN ADDITION TO PENETRATION SEALS, APPROVED FIRE STOPS SHALL BE INSTALLED TO MAINTAIN FIRE RATING OF ANY FIRE RATED FLOORS OR WALLS BEING PENETRATED, TO BE DETERMINED BY THE ENGINEER.
   11. CONDUIT INSTALLED OUTDOORS OR IN HIGH HUMIDITY AREAS WHERE WATER MIGHT ENTER OR CONDENSE INSIDE THE CONDUIT SHALL BE ROUTED INTO THE BOTTOM OR SIDES OF ENCLOSURES WITH A LOW POINT DRAIN.
   12. CONDUIT ON FLAT ROOFS SHALL BE SUPPORTED USING EATON DURABLOK DBM OR EQUIVALENT.
   13. CONDUIT ON TILTED ASPHALT SHINGLE ROOFS SHALL BE SUPPORTED USING QUICKMOUNT QMCC OR EQUIVALENT.
   14. CONDUIT ON TILTED STANDING SEAM METAL ROOF SHALL BE SUPPORTED USING S5! S–5–U MINI WITH MATERIALLAC CONDUIT HANGER OR EQUIVALENTS.
   15. ALL CONDUITS SHALL BE INSTALLED PER NEC AND LOCAL AHJ CODES AND STANDARDS UNLESS NOTED OTHERWISE.
   16. OUTDOOR CONDUIT RUNS SHALL NOT CONTAIN MOISTURE POCKETS. DRAINS SHALL BE INSTALLED IN OUTDOOR CONDUIT RUNS TO REMOVE MOISTURE FROM THE CONDUITS AT LOCATIONS WHERE CONDUITS TERMINATE ON EQUIPMENT OR DEVICES AND AT ALL LOCATIONS WHERE CONDUITS PENETRATE AN EXTERIOR WALL. MOISTURE IN CONDUIT SHALL NOT BE DRAINED THROUGH EQUIPMENT OR DEVICES CONTAINING ELECTRICAL CONNECTIONS.
   17. CONDUIT INSTALLED IN ALL EXPOSED OUTDOOR LOCATIONS WITHIN 2 MILES OF A BODY OF SALT WATER SHALL BE PVC–COATED RIGID STEEL OR ALUMINUM, RIGIDLY SUPPORTED BY PVC–COATED OR ALUMINUM FRAMING MATERIAL. MOUNTING HARDWARE, WHICH INCLUDES NUTS, BOLTS, AND ANCHORS, SHALL BE STAINLESS STEEL. SUBCONTRACTOR SHALL REPAIR ALL DAMGED COATINGS ACCORDING TO THE MANUFACTURER'S INSTRUCTIONS. CONDUIT AND FRAMING MATERIAL SHALL BE COMPATIBLE TO ELIMINATE DISSIMILAR METAL CORROSION ISSUES.

5.2 GROUNDING SYSTEMS

A. FURNISH AND INSTALL ALL COMPONENTS INCLUDING GROUND RODS, GROUND CONDUCTOR, GROUND BUS, ABOVE AND BELOW GRADE GROUNDING CONNECTIONS, GROUNDING LUGS, AND ANY OTHER HARDWARE REQUIRED FOR A COMPLETE GROUNDING SYSTEM.

B. FURNISH AND INSTALL SUITABLE GROUNDING FACILITIES ON NEW PV ELECTRICAL EQUIPMENT NOT SO EQUIPPED.

C. GROUNDING FACILITIES SHALL CONSIST OF IRREVERSIBLE COMPRESSION TYPE TERMINAL CONNECTORS BOLTED TO THE EQUIPMENT FRAME OR ENCLOSURE.

D. NO EQUIPMENT GROUNDING CONDUCTOR SHALL BE SMALLER IN SIZE THAN 12 AWG, UNLESS IT IS A PART OF PREMANUFACTURED CABLE ASSEMBLY.

E. CONNECT METALLIC EQUIPMENT TO THE EQUIPMENT GROUNDING NETWORK USING APPROPRIATE BUSHINGS OR OTHER CONNECTORS.

F. BOND METALLIC RACEWAY AT BOTH ENDS OF THE RACEWAY. RACEWAY SHALL NOT BE USED AS THE SOLE EQUIPMENT GROUND CONNECTOR.

G. CIRCUITS SHALL HAVE A GREEN OR BARE EQUIPMENT GROUND CONDUCTOR ROUTED IN THE SAME RACEWAY AND PARALLEL TO ALL POWER CONDUCTORS OPERATING ABOVE 50V.

5.3 POWER AND CONTROL CABLING

5.3.1 CABLE INSTALLATION

A. CABLE INSTALLATION SHALL BE IN ACCORDANCE WITH THE FOLLOWING:
   1. CABLES SHALL BE INSTALLED IN ACCORDANCE WITH CABLE MANUFACTURERS' RECOMMENDATIONS, CIRCUIT LISTS, DRAWINGS, AND THESE TECHNICAL SPECIFICATIONS. SEPARATE CABLES BY VOLTAGE AS REQUIRED BY NEC AND LOCAL AHJ CODES AND STANDARDS AND MANUFACTURES REQUIREMENTS.
   2. ROUTE CABLES IN UL LISTED WIREWAY, ABOVE GRADE EMT CONDUIT, OR DIRECT BURIED PVC CONDUIT, AS REQUIRED.
   3. INSTALL CABLE SUPPORTS AND SECURING DEVICES TO PROVIDE ADEQUATE SUPPORT WITHOUT DEFORMATION OF CABLE JACKETS OR INSULATION.
   4. USE OVERSIZED, UV RESISTANT NYLON WIRE TIES FOR BUNDLING CONDUCTORS FOR ALL EXPOSED WIRING. WIRE TIES SHALL BE SNUG, BUT ALLOW FOR THERMAL EXPANSION.
   5. NEATLY BUNDLE AND SECURELY FASTEN ALL EXPOSED WIRING. SECURED EXPOSED WIRING TO PREVENT RUBBING AND DAMAGE FROM METAL SURFACES, BOLT THREADS, SHARP SURFACES, OR WIRE TIES.
   6. SECURE WIRING AT LOCATIONS NOT SPACED MORE THAN 24 IN. ON CENTER AND SUCH THAT WIRING IS NOT FREE TO MOVE DUE TO WIND, SNOW OR OTHER ENVIRONMENTAL CONDITIONS.
   7. ASSIGN EACH CIRCUIT WITH A UNIQUE NUMBER DESIGNATED AS FOLLOWS:

DC CABLE LABELING

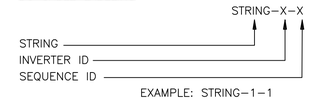


EXAMPLE: STRING–1–1

AC CABLE LABELING

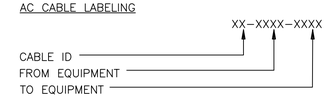


EXAMPLE: 02–INV1–PNL1

   8. COLOR CODE POWER WIRING AS FOLLOWS:

| CIRCUIT | COLOR CODE |
|---|---|
| 208Y/120V CIRCUITS<br>240/120V CIRCUIT | BLACK – PHASE A |
| | RED – PHASE B |
| | BLUE – PHASE C |
| | WHITE – NEUTRAL |
| 480Y/277V CIRCUITS | BROWN – PHASE A |
| | ORANGE – PHASE B |
| | YELLOW – PHASE C |
| | GRAY/WHITE – NEUTRAL |
| DC CIRCUITS | RED – DC POSITIVE |
| | BLACK – DC NEGATIVE |
| NEUTRAL | GRAY/WHITE |
| GROUND | GREEN |

NOTE: THE HIGH LEG OF A 3–PHASE DELTA 4–WIRE SYSTEM SHALL BE ORANGE IN COLOR [NEC110.15]

B. CABLE PLACEMENT SHALL BE IN ACCORDANCE WITH THE FOLLOWING:
   1. DO NOT HANDLE CABLE WHEN THE TEMPERATURE IS BELOW MINIMUM TEMPERATURE RECOMMENDED BY MANUFACTURER. IF HEATING IS REQUIRED PRIOR TO PLACEMENT, STORE CABLE IN A HEATED BUILDING IN ACCORDANCE WITH MANUFACTURER'S RECOMMENDATIONS FOR AT A PERIOD OF AT LEAST 24 HRS. PLACE CABLE DURING THE SAME DAY IT IS REMOVED FROM HEATED STORAGE.
   2. CABLE PULLING TENSION SHALL NOT EXCEED MAXIMUM TENSION RECOMMENDED BY CABLE MANUFACTURER. PULLING MECHANISMS OF BOTH MANUAL AND POWER TYPES SHALL HAVE RATED CAPACITY IN TONS CLEARLY MARKED ON MECHANISM. IF ANY EXCESSIVE STRAIN DEVELOPS, PULLING OPERATION SHALL BE STOPPED AT ONCE AND DIFFICULTY DETERMINED AND CORRECTED. DO NOT PULL CABLE USING TRUCKS, FORKLIFTS, CRANES OR OTHER DEVICES WHERE TENSION OF CABLE PULL CANNOT BE EASILY CONTROLLED.
      a. CABLE GRIPS: WHEN PULLING LOOPS ARE USED, ENTIRE LOOP SHALL BE CUT OFF, DISCARDED AND RECYCLED AFTER PULL IS COMPLETED.
      b. INSPECTION: CAREFULLY INSPECT OUTSIDE OF EACH CABLE REEL AND REMOVE PROTRUDING NAILS, FASTENINGS OR OTHER OBJECTS WHICH MIGHT DAMAGE CABLE.
   3. COMPLETE A THOROUGH VISUAL INSPECTION FOR FLAWS, BREAKS OR ABRASIONS IN CABLE SHEATH AS CABLE LEAVES THE REEL. USE PULLING SPEED SLOW ENOUGH TO PERMIT THIS INSPECTION.
   4. REPLACE CABLE DAMAGED IN ANY WAY DURING INSTALLATION. DAMAGE TO THE SHEATH OR FINISH OF THE CABLE SHALL BE SUFFICIENT CAUSE FOR REJECTING THE CABLE.
      a. CABLE BENDS: TAPE SHIELDED, FLAT TAPE ARMORED AND WIRE ARMORED CABLE SHALL NOT BE BENT TO RADIUS OF LESS THAN 12X OVERALL CABLE DIAMETER. ALL OTHER CABLES SHALL NOT BE BENT TO A RADIUS OF LESS THAN 8X CABLE DIAMETER.
      b. SPARE CONDUCTORS: LEAVE SPARE CONDUCTORS OF A MULTI–CONDUCTOR CABLE AT THEIR MAXIMUM LENGTHS FOR POSSIBLE REPLACEMENT OF ANY OTHER CONDUCTORS IN THE CABLE. EACH SPARE CONDUCTOR SHALL BE NEATLY DRESSED FOR FUTURE USE AND MARKED AS "SPARE <<NUMBER>>".
      c. LACING: USE UV RATED TIES TO NEATLY LACE TOGETHER CONDUCTORS ENTERING SWITCHBOARDS AND SIMILAR LOCATIONS AFTER CONDUCTORS HAVE EMERGED FROM THEIR SUPPORTING RACEWAY AND BEFORE THEY ARE ATTACHED TO TERMINALS.
   5. CABLE IDENTIFICATION
      a. IDENTIFY BOTH ENDS OF ALL CIRCUITS.
      b. WRITE CIRCUIT NUMBER AT EACH MARKER IN ACCORDANCE WITH THE DRAWINGS.
      c. IDENTIFY EACH CIRCUIT AT TERMINATIONS.
      d. INDIVIDUALLY IDENTIFY EACH PHASE OF MULTIPHASE POWER CIRCUITS.
      e. ATTACH CIRCUIT TAG SO IT IS READILY VISIBLE FOR CIRCUIT IDENTIFICATION.
   6. CONTAIN DC WIRING WITHIN MODULE FOOTPRINT WHENEVER POSSIBLE.
   7. CONDUCTORS SHALL BE IN CONDUIT WHEN NOT UNDER SOLAR MODULES OR ALONG RACKING.
   8. CABLING MAY BE ATTACHED ALONG RACKING USING UV RESISTANT CABLE TIES SUCH AS HEYCO "NYTYE" OR EQUIVALENT.
   9. CABLING WITHIN DUAL TILT RACKING SHALL BE SUPPORTED ALONG RACKING USING UNIRAC RM WIRE MANAGEMENT CLIP OR EQUIVALENT.

WARNING:
IT IS A VIOLATION OF THE NYS EDUCATION LAW ARTICLE 145 FOR ANY PERSON, UNLESS HE OR SHE IS ACTING UNDER THE DIRECTION OF A LICENSED PROFESSIONAL ENGINEER, TO ALTER THIS ITEM IN ANY WAY.

APPROVED FOR CONSTRUCTION
THE DISTRIBUTION AND USE OF THE NATIVE FORMAT CAD FILE OF THIS DRAWING IS UNCONTROLLED. THE USER SHALL VERIFY TRACEABILITY OF THIS DRAWING TO THE LATEST CONTROLLED VERSION.

STATE OF NEW YORK · BRIAN CAULEY ROGERS · 103183 · LICENSED PROFESSIONAL ENGINEER
Date Signed 03/24/2022
License Expires: 06/30/2023

| NO | DATE | REVISIONS AND RECORD OF ISSUE | DRN | DES | CHK | PDE | APP |
|---|---|---|---|---|---|---|---|
| 1 | 24/MAR/22 | APPROVED FOR CONSTRUCTION | IJR | IJR | NST | BCR | BCR |
| 0 | 15/APR/21 | ISSUED FOR PERMITTING | WS | JKT | NST | BCR | BCR |

I HEREBY CERTIFY THAT THIS DOCUMENT WAS PREPARED BY ME OR UNDER MY DIRECT SUPERVISION AND THAT I AM A DULY REGISTERED PROFESSIONAL ENGINEER UNDER THE LAWS OF THE STATE OF NEW YORK.
SIGNED BRIAN C. ROGERS
DATE 15/APR/21 REG NO. 103183

BLACK & VEATCH
BLACK & VEATCH NEW YORK, LLP 11404 LAMAR AVE, OVERLAND PARK, KS 66211
CERTIFICATE OF AUTHORIZATION NO. 0018348 EXP: 12/2023

DESIGNER JKT | DRAWN WS | CHECKED NST | DATE 15/APR/21

J.P. MORGAN CHASE
TRANCHE 10 - NEW YORK

GENERAL NOTES

PROJECT NY-STNDRD-SG20 | DRAWING NUMBER | REV 1
CODE
AREA

ANSI D 34x22
02/14/2017 04:16 PM

5.3.2 CONNECTORS

A. THIS SECTION DEFINES METHODS OF CONNECTING CABLE BETWEEN ELECTRICAL SYSTEMS AND EQUIPMENT. TERM "CONNECTOR" IS APPLIED TO DEVICES THAT JOIN TWO OR MORE CONDUCTORS OR ARE USED TO TERMINATE CONDUCTORS AT EQUIPMENT TERMINALS FOR PROVIDING A CONTINUOUS ELECTRICAL PATH.

B. INSTALL CONNECTORS AS FOLLOWS:
   1. USE CONNECTOR MATERIAL THAT IS COMPATIBLE WITH THE CONDUCTOR MATERIAL TO AVOID OCCURRENCE OF ELECTROLYTIC ACTION BETWEEN METALS.
   2. CALIBRATE INSTALLATION TOOL AS APPROVED BY MANUFACTURER.
   3. LOW VOLTAGE TERMINATIONS SHALL BE PERMITTED TO BE SCREW DOWN LUGS WHERE ONLY SCREW DOWN LUGS ARE AVAILABLE, SUCH AS MOLDED CASE CIRCUIT BREAKERS AND CONTROL / INSTRUMENT TERMINAL BLOCKS.
   4. DO NOT SPLICE CABLES OR UTILIZE JOINTS AND CONNECTIONS IN CABLE, OTHER THAN CABLE TERMINATIONS AT EQUIPMENT.

C. CONTRACTOR SHALL FURNISH AND INSTALL CABLES WITH STAUBLI MC4 CONNECTORS FOR HOMERUN STRING TERMINATION AND CONDUCTORS IN THE SAME STRINGS BETWEEN SEPARATED ARRAYS. STAUBLI (PV-KBT4/5...-UR, PV-KST4/5...-UR, PV-KBT4/8II-UR AND PV-KST4/8II-UR ) BARREL CRIMP CONTACTS BE USED WITH THE MC4 CONNECTOR. STAUBLI (PV-CZM-23100) CRIMPING TOOL/DIE COMBINATION SHALL BE USED. MANUFACTURER'S INSTRUCTION SHALL BE FOLLOWED FOR INSTALLATION. MANUFACTURER'S TESTING TOOL (STAUBLI TEST PLUG PV-PST) SHALL BE USED AFTER ASSEMBLY.

   UNMATED MC4 CONNECTORS MUST BE PROTECTED FROM MOISTURE AND DIRT WITH A SEALING CAP (PV-BVK4 FOR SOCKETS AND PV-SVK4 FOR PLUGS)

5.4 LOW VOLTAGE DRY-TYPE TRANSFORMER

A. MOUNT APPROXIMATELY WHERE INDICATED ON DRAWINGS.

B. LOAD ANY VIBRATION ISOLATORS EXTERNAL TO UNIT PROPERLY AND PROVIDE COMPLETE ISOLATION WITH NO DIRECT TRANSFORMER UNIT METAL IN CONTACT WITH MOUNTING SURFACE. (IF REQUIRED)

C. CONNECT ELECTRICAL CIRCUITS TO TRANSFORMERS BY MEANS OF MOISTURE PROOF, FLEXIBLE METALLIC CONDUIT IN A MANNER THAT PREVENTS TRANSFORMER VIBRATIONS FROM BEING TRANSMITTED TO BUILDING OR OTHER EQUIPMENT.

D. GROUND ENCLOSURES AND NEUTRALS (IF REQUIRED) OF ALL TRANSFORMERS AND ALL MOISTURE PROOF FLEXIBLE CONDUITS IN ACCORDANCE WITH APPLICABLE CODES AND STANDARDS.

E. CONNECT VOLTAGE TAPS ON ALL TRANSFORMERS TO GIVE AS CLOSE AS POSSIBLE TO RATED OUTPUT VOLTAGE UNDER NORMAL SYSTEM LOAD CONDITIONS.

F. TAMPER RESISTANT HARDWARE SHALL BE INSTALLED. WALL MOUNTED TRANSFORMERS SHALL BE INSTALLED WITH DRIP PLATES.

5.5 LOW VOLTAGE PANELBOARDS

A. MOUNT SECURELY WHERE INDICATED, PLUMB, IN-LINE AND SQUARE WITH WALLS. ALSO MOUNT WITH TOP OF ITS CABINET APPROXIMATELY 6 FT ABOVE FINISHED FLOOR.

B. PROVIDE A TYPEWRITTEN CIRCUIT DIRECTORY UNDER A METAL FRAMED TRANSPARENT PLASTIC COVER INSIDE EACH PANELBOARD.

C. PROVIDE AN ENGRAVED, LAMINATED PLASTIC NAMEPLATE ON OUTSIDE OF PANELBOARD SHOWING PANELBOARD DESIGNATION, VOLTAGE AND PHASES.

5.6 INVERTERS

A. INSTALL IN ACCORDANCE WITH SOLAREDGE INSTALLATION INSTRUCTIONS.

5.7 METER SOCKET

A. INSTALL IN ACCORDANCE WITH UTILITY.

5.8 DISCONNECT SWITCHES

A. MOUNT SWITCHES FOR SWITCH OPERATION IN VERTICAL POSITION.

B. MOUNT DEVICE SO THAT INDICATING PANEL IS IN UPRIGHT VERTICAL POSITION AND EASILY SEEN.

C. WIRE SUCH THAT WHEN SWITCH IS OPENED THE CONDUCTORS REMAINING ENERGIZED ARE CONNECTED TO THE TERMINALS MARKED "LINE SIDE" (TYPICALLY THE UPPER TERMINALS).

D. INSTALL CURRENT TRANSFORMERS FOR REVENUE GRADE METER WITHIN DISCONNECT SWITCHES IN ACCORDANCE WITH CONTINENTAL CONTROL SYSTEMS INSTALLATION INSTRUCTIONS.

E. EQUIPMENT LOCATION TOLERANCES
   a. LOCATE CLOSE TO UTILITY METER AND ON THE SAME WALL, PER UTILITY REQUIREMENTS.
   b. COORDINATE LOCATION OF DISCONNECT SWITCH WITH ALL OTHER EQUIPMENT OR MATERIALS TO BE INSTALLED.

5.9 EQUIPMENT LABELING

A. ALL EQUIPMENT SHALL HAVE A PERMANENT IDENTIFICATION LABEL VISIBLE AND READABLE FROM DISTANCE OF 48 IN. THAT PROVIDES UNIQUE EQUIPMENT IDENTIFICATION NUMBER AS INDICATED ON ELECTRICAL DRAWINGS. ALL TEXT SHALL BE UPPERCASE. LABELS TO BE A MIMIMUM LETTER HEIGHT OF 3/8" AND PERMANENTLY AFFIXED. LABELS TO BE OF SUFFICENT DURABILITY TO WITHSTAND THE ENVIROMENT INVOLVED.

B. LISTED TO UL 969

C. THE LABEL SHALL BE BLACK TEXT ON WHITE BACKGROUND

5.10 ALIGNMENT

A. RIGID COMPONENTS, SUCH AS ENCLOSURES, SHALL BE ALIGNED AND CONNECTED WITH SPECIAL CARE TO PREVENT EXCESSIVE STRESS IN JOINTS, SUPPORTS AND CONNECTIONS.

5.11 BOLTED ELECTRICAL CONNECTIONS

A. TORQUE BOLTED ELECTRICAL CONNECTIONS IN ACCORDANCE WITH MANUFACTURER'S RECOMMENDATIONS AND THE NEC. COORDINATE BOLT TIGHTNESS CHECKS TO MINIMIZE INTERFERENCE WITH EQUIPMENT INSTALLATION SEQUENCE.

B. TIGHTEN STRUCTURAL BOLTS AND ELECTRICAL DRY, UNPLATED, NONLUBRICATED BOLTS WITH MANUAL TORQUE WRENCHES AND MARKED TORQUED CONNECTIONS WITH SCRIBE LINES.

C. RANDOMLY CHECK TIGHTENED BOLTS IN ELECTRICAL CONNECTIONS; 10% OF CONNECTIONS SHALL BE REVIEWED, DOCUMENTED AND MARKED WITH TORQUE SCRIBE LINES.

D. VERIFY FACTORY BOLT TORQUES AS PART OF THE EQUIPMENT CHECKOUT AND TEST PROCEDURES.

E. SETUP TORQUE WRENCHES SO THEY VISUALLY OR AUDIBLY INDICATE WHEN PROPER TORQUE IS REACHED.

F. RE-TORQUE AND WITNESS ALL CONNECTIONS IF 1% OF THE 10% SAMPLINGS FAIL.

G. THOROUGHLY CLEAN AND COAT METAL SURFACES WITH A SUITABLE ANTIOXIDIZING COMPOUND WHERE BOLTED CONNECTIONS ARE MADE BETWEEN COPPER OR BRASS SURFACES.

5.12 EQUIPMENT FINISHES

A. SURFACES OF MOST ELECTRICAL EQUIPMENT, SUCH AS PANELS, SWITCHGEAR, TRANSFORMERS AND CIRCUIT BREAKERS, ARE FINISHED AT THE FACTORY. EXERCISE CARE TO PREVENT DAMAGE TO THIS ORIGINAL FINISH DURING EQUIPMENT INSTALLATION AND DURING CONSTRUCTION WORK.

B. IF FACTORY FINISH IS DAMAGED DURING CONSTRUCTION, TOUCH-UP OR REFINISH THE DAMAGED COMPONENT TO THE SATISFACTION OF CONSTRUCTION MANAGER, AT CONTRACTOR'S EXPENSE.

C. TOUCHUP PAINT, IF FURNISHED WITH THE EQUIPMENT, MAY BE USED; OTHERWISE OBTAIN PAINT FROM THE EQUIPMENT MANUFACTURE.

D. USE PAINT APPLICATION PROCEDURE IN ACCORDANCE WITH MANUFACTURERS' RECOMMENDATION INCLUDING SURFACE PREPARATION AND APPLICATION OF A PRIMER COAT.

5.13 SUPPLY SIDE CONNECTIONS TO EXISTING PANELS WITH COMBINED UTILITY METERING EQUIPMENT

A. INTERCONNECT TO EXISTING BUS BARS BETWEEN THE LINE SIDE OF MAIN BREAKER AND METERING SECTION INSIDE CUSTOMER CABINET.

B. MODIFICATIONS TO EXISTING EQUIPMENT SHALL REQUIRE 3RD PARTY UL RECERTIFICATION UNLESS USING MANUFACTURER PROVIDED MODIFICATIONS WHERE THE UL LISTING IS MAINTAINED.

6.0 ELECTRICAL EQUIPMENT TESTING

6.1 ELECTRICAL TESTING

A. PERFORM ELECTRICAL TESTING IN ACCORDANCE WITH NETA ACCEPTANCE TESTING SPECIFICATIONS (ATS) PROCEDURES AND TEST FORMS. TEST PERSONNEL SHALL HAVE A MINIMUM OF 5 YEARS EXPERIENCE PERFORMING THE REQUIRED TYPE OF ELECTRICAL TESTS.

B. ELECTRICAL TESTING AND COMMISSIONING SHALL INCLUDE, BUT NOT BE LIMITED TO, THE FOLLOWING EQUIPMENT:
   1. ALL ELECTRICAL CABLES, INCLUDING
      a. DC POWER CABLES
      b. LOW VOLTAGE AC POWER CABLES
      c. CONTROL CABLES
      d. ANALOG INSTRUMENTATION CABLES
   2. GROUNDING SYSTEMS
   3. DRY-TYPE TRANSFORMERS
   4. PANELBOARDS
   5. INVERTERS
   6. DC OPTIMIZER
   7. CELLULAR KITS

6.2 CABLE TESTING

A. PROVIDE FIELD TESTING OF ALL WIRE, CABLE, ELECTRICAL DEVICES AND EQUIPMENT, AND ELECTRICAL SYSTEMS FURNISHED AND INSTALLED.

B. FOLLOWING ITEMS SHALL BE PERFORMED AND PROCEDURES SHALL BE FOLLOWED:
   1. TEST PROTOCOL AND FORMS SHALL CONFORM TO NETA ACCEPTANCE TESTING SPECIFICATIONS.
   2. PREPARE AND SUBMIT ELECTRICAL TESTING PLAN TO ENGINEER FOR REVIEW AND APPROVAL.
   3. INFORM CONSTRUCTION MANAGER IN WRITING A MINIMUM OF 3 DAYS IN ADVANCE OF ALL SCHEDULED TESTING TO WITNESS ANY SUCH ELECTRICAL TESTING.
   4. CREATE AND MAINTAIN WRITTEN RECORDS AND SUBMIT FOR REVIEW BY CONSTRUCTION MANAGER ALL ELECTRICAL TESTS DESCRIBED IN SECTION 5.4 OF 2017 NETA-ATS INCLUDING DATE OF TEST, TEST EQUIPMENT USED, PERSONNEL MAKING TEST, EQUIPMENT OR MATERIAL TESTED, TESTS PERFORMED AND RESULTS, INCLUDING ANY DEFICIENCIES FOUND.
   5. INCLUDE NAMEPLATE DATA OF EQUIPMENT BEING TESTED IN ALL TEST REPORTS.
   6. PROVIDE NECESSARY TEST EQUIPMENT, LABOR, MATERIALS AND SUBCONTRACTED TESTING SERVICES.
   7. IF EQUIPMENT OR MATERIAL ARE DAMAGED DUE TO IMPROPER TEST PROCEDURES OR TEST APPARATUS HANDLING, REPLACE OR RESTORE THE DAMAGED COMPONENT TO ORIGINAL CONDITION AT CONSTRUCTION MANAGER'S DISCRETION, AT CONTRACTOR'S EXPENSE.
   8. PROVIDE AND UTILIZE SAFETY DEVICES INCLUDING RUBBER GLOVES, BLANKETS, PROTECTIVE SCREENS AND BARRIERS, BARRICADE TAPE, DANGER SIGNS, ETC. DURING ELECTRICAL TESTING TO ADEQUATELY PROTECT AND WARN PERSONNEL IN THE VICINITY OF TESTS BEING PERFORMED.

6.2.1 AFTER PLACEMENT

A. FURNISH ALL EQUIPMENT AND LABOR REQUIRED FOR TESTING.

B. PERFORM PREOPERATIONAL TESTS ON INSULATED CONDUCTORS AFTER INSTALLATION AS FOLLOWS:
   1. LOW VOLTAGE CABLES SHALL BE EITHER INSULATION RESISTANCE TESTED BEFORE CONNECTING TO EQUIPMENT OR FUNCTIONALLY TESTED (AT EQUIPMENT OPERATION VOLTAGE) AS PART OF EQUIPMENT AND/OR SYSTEM CHECKOUT.
   2. INSULATED CONDUCTORS SHALL BE CONTINUITY TESTED FOR CORRECT CONDUCTOR IDENTIFICATION.

C. TEST CIRCUITS WITH CIRCUIT COMPLETE EXCEPT FOR CONNECTIONS TO EQUIPMENT.

D. PERFORM CONTINUITY TESTS ON ALL SUPERVISORY AND COMMUNICATION CABLE BEFORE AND AFTER EACH SPLICE IS MADE IN ADDITION TO TESTS PERFORMED AFTER CABLE PLACEMENT IS COMPLETE.

E. CIRCUITS FAILING TO TEST SATISFACTORILY SHALL BE REPLACED OR REPAIRED AND THEN RETESTED, AT CONTRACTOR'S EXPENSE.

6.2.2 IDENTIFICATION TESTING

A. IDENTIFICATION TESTS SHALL INCLUDE ALL TESTS NECESSARY TO CONFIRM THAT CONDUCTOR BEING INVESTIGATED ORIGINATES AND TERMINATES AT LOCATIONS DESIGNATED IN CIRCUIT LIST OR INDICATED ON DRAWINGS.

6.2.3 INSULATION RESISTANCE TESTING

A. ALL CABLES RATED LESS THAN 5,000 V SHALL BE INSULATION RESISTANCE TESTED, INCLUDING:
   1. LOW VOLTAGE AC POWER CABLES
   2. DRY-TYPE TRANSFORMERS

B. PERFORM INSULATION RESISTANCE TESTING WITH A 1,000 V MEGGER OR AN EQUIVALENT TESTING DEVICE.

C. COMPLETE INSULATION RESISTANCE MEASUREMENTS BETWEEN EACH CONDUCTOR AND GROUND AND BETWEEN EACH CONDUCTOR AND ALL OTHER CONDUCTORS OF THE SAME CIRCUIT.

D. MINIMUM ACCEPTABLE RESISTANCE VALUE SHALL BE 500 MEGAOHMS

6.2.4 CONTINUITY TESTING

A. CONTINUITY TESTS SHALL INCLUDE ALL TESTS NECESSARY TO CONFIRM THAT EACH CONDUCTOR IS CONTINUOUS THROUGHOUT ITS ENTIRE LENGTH.

6.2.5 RS-485 COMMUNICATION CABLE TESTING

A. TEST FOR CONTINUITY ALL INSULATED CONDUCTORS OF COMMUNICATION CABLE.

B. PERFORM HIGH PERFORMANCE CABLE CERTIFICATION FOR PERMANENT LINK CONFIGURATION AND DOCUMENTED FOR ALL RS-485 CABLES.

C. TEST SPECIFICATIONS FOR ALL INSTALLED CABLES SHALL MEET OR EXCEED THE SPECIFICATIONS FOR COMMUNICATION CABLING, RESPECTIVELY, THAT ARE DOCUMENTED WITHIN TIA/EIA-485.

D. CORRECT OR REPLACE AND RECERTIFY CABLES NOT ACHIEVING A PASS RATING.

E. A RATING OF *PASS (MARGINALLY PASS) OR *FAIL (MARGINALLY FAIL) IS NOT ACCEPTABLE.

SYMBOL LEGEND

- ESP — ELECTRICAL SERVICE PANEL
- SWII — INVERTER FUSED DISCONNECT
- ACSW — PHOTOVOLTAIC AC DISCONNECT SWITCH
- INV — DC/AC INVERTER
- PNL1 — DEDICATED PV SYSTEM COMBINER PANEL
- PNL2 — METERING AND SURGE PROTECTION CABINET
- GM — PHOTOVOLTAIC PRODUCTION METER
- T — TRANSFORMER
- ESD — ELECTRICAL SERVICE DISCONNECT
- UDS — PHOTOVOLTAIC SYSTEM UTILITY DISCONNECT
- M — EXISTING UTILITY METER
- 1-1 — MODULE STRINGING
- 1-2 — MODULE STRINGING
- 2-1 — MODULE STRINGING
- 3-1 — MODULE STRINGING
- PROPERTY LINE
- ROOF RAFTERS
- GROUND CONDUCTOR
- PITCHED ROOF FIRE CLEARANCE AREA
- FLAT ROOF FIRE CLEARANCE AREA

NORTH INDICATOR

N

DISCLAIMER: PLEASE NOTE THAT THE SYMBOLS LISTED ARE INTENDED TO ILLUSTRATE THOSE THAT ARE COMMONLY USED; NOT ALL ARE NECESSARILY UTILIZED WITHIN THIS SET OF DRAWINGS.

ABBREVIATIONS

| | |
|---|---|
| AC | ALTERNATING CURRENT |
| AHJ | AUTHORITY HAVING JURISDICTION |
| AWG | AMERICAN WIRE GUAGE |
| DC | DIRECT CURRENT |
| DWG | DRAWING |
| EMT | ELECTRIC METALLIC TUBE CONDUIT |
| GND | GROUND |
| IEEE | INSTITUTE OF ELECTRICAL AND ELCTRONICS ENGINEERS |
| INV | INVERTER |
| MAX | MAXIMUM |
| MIN | MINIMUM |
| NEC | NATIONAL ELECTRIC CODE |
| NESC | NATIONAL ELECTRICAL SAFETY CODE |
| OSHA | OCCUPATIONAL SAFETY AND HEALTH ADMINISTRATION |
| PV | PHOTOVOLTAIC |
| SS | STAINLESS STEEL |
| TYP | TYPICAL |
| UL | UNDERWRITERS LABORATORIES |
| UNO | UNLESS NOTED OTHERWISE |
| UV | ULTRAVIOLET |
| DS | DISCONNECT SWITCH |
| POI | POINT OF INTERCONNECTION |
| (E) | EXISTING |

WARNING:
IT IS A VIOLATION OF THE NYS EDUCATION LAW ARTICLE 145 FOR ANY PERSON, UNLESS HE OR SHE IS ACTING UNDER THE DIRECTION OF A LICENSED PROFESSIONAL ENGINEER, TO ALTER THIS ITEM IN ANY WAY.

APPROVED FOR CONSTRUCTION

THE DISTRIBUTION AND USE OF THE NATIVE FORMAT CAD FILE OF THIS DRAWING IS UNCONTROLLED. THE USER SHALL VERIFY TRACEABILITY OF THIS DRAWING TO THE LATEST CONTROLLED VERSION.

STATE OF NEW YORK · BRIAN CAULEY ROGERS · 103183 · LICENSED PROFESSIONAL ENGINEER

Date Signed: 03/24/2022
License Expires: 06/30/2023

| NO | DATE | REVISIONS AND RECORD OF ISSUE | DRN | DES | CHK | PDE | APP |
|---|---|---|---|---|---|---|---|
| 2 | 24/MAR/22 | APPROVED FOR CONSTRUCTION | IJR | IJR | NST | BCR | BCR |
| 1 | 15/MAR/22 | ISSUED FOR PERMITTING | IJR | JKT | NST | BCR | BCR |
| 0 | 15/APR/21 | ISSUED FOR PERMITTING | WS | JKT | NST | BCR | BCR |

I HEREBY CERTIFY THAT THIS DOCUMENT WAS PREPARED BY ME OR UNDER MY DIRECT SUPERVISION AND THAT I AM A DULY REGISTERED PROFESSIONAL ENGINEER UNDER THE LAWS OF THE STATE OF NEW YORK.
SIGNED BRIAN C. ROGERS
DATE 15/APR/21 REG NO. 103183

BLACK & VEATCH — BLACK & VEATCH NEW YORK, LLP 11404 LAMAR AVE, OVERLAND PARK, KS 66211 CERTIFICATE OF AUTHORIZATION NO. 0018348 EXP: 12/2023

DESIGNER JKT | DRAWN WS | CHECKED NST | DATE 15/APR/21

J.P. MORGAN CHASE
TRANCHE 10 - NEW YORK

GENERAL NOTES

PROJECT NY-STNDRD-SG21 | DRAWING NUMBER | REV 2 | CODE | AREA

ANSI D 34x22
02/14/2017 04:16 PM

NOTES:

1. SEE DRAWING SG20 AND SG21 FOR GENERAL NOTES.
2. DESIGN OF PV MODULE PER MISSION SOLAR SPECIFICATIONS NOTED ON DRAWINGS SR10, SR11 AND SR20.
3. DESIGN OF RACKING ASSEMBLY AND CONNECTION TO SOLAR MODULE PER UNIRAC SPECIFICATIONS AND SITE SPECIFIC RACKING DRAWING PACKAGE.
4. CONTRACTOR SHALL REFER TO UNIRAC DRAWINGS AND INSTALLATION MANUAL FOR RACKING ASSEMBLY AND COMPONENT DETAILS.
5. CONSTRUCTION LIVE LOADING ON THE ROOF, INCLUDING BUT NOT LIMITED TO MATERIAL STAGED ON THE ROOF, SHALL NOT EXCEED 20 psf. CONCENTRATED LOADING SHALL BE AVOIDED TO PREVENT LOCALIZED DAMAGES TO THE ROOF. FOR EXAMPLE, A 26 SOLAR MODULE PALLET WEIGHING 1302 LBS MAY UTILIZE CRIBBING THAT DISTRIBUTES LOADING OVER AN 8'–3"X8'–3" AREA TO MEET CONSTRUCTION LOAD REQUIREMENT.
6. CONNECTION OF SOLAR MODULE TO BALLASTED RACKING ASSEMBLY SHALL BE APPLIED PER UNIRAC INSTALLATION REQUIREMENTS AND BE PLACED WITHIN 25" FROM END OF SOLAR MODULE ALONG LONG EDGE TO ALIGN WITH RACKING ASSEMBLY COMPONENTS IN ACCORDANCE WITH TESTED ATTACHMENT LOCATIONS. SPACE BETWEEN SOLAR MODULES AT BASE SUPPORTS MOUNTS SHALL BE 1/4" MINIMUM AND 1" MAXIMUM AND SHALL BE CENTERED ON BASE SUPPORT MOUNT FRAME.

BALLAST BLOCK CRITERIA:

7. FREEZE/THAW RESISTANT BALLAST BLOCK (MINIMUM 3000 PSI) SHALL BE USED AND MEET ASTM STANDARD C1491 WITH AN INTEGRAL WATER REPELLANT SUITABLE FOR THE CLIMATE IT IS PLACED.
8. NOMINAL DIMENSIONS OF BALLAST BLOCK SHALL BE 4"X8"X16". NOTE THAT ACTUAL BLOCK DIMENSIONS ARE 3/8" LESS THAN THE NOMINAL DIMENSIONS.
9. WEIGHT OF BALLAST BLOCK SHALL BE 33 LBS, (+/– 1/4 LBS).
10. FURNISH AND INSTALL (BY SUBCONTRACTOR (75.0730)) ALL BALLAST BLOCKS REQUIRED FOR FLAT ROOF RACKING SYSTEM AS SHOWN ON UNIRAC DRAWING PACKAGE. SEE BALLAST DISTRIBUTION PLAN FOR LOCATION AND QUANTITY OF BALLAST BLOCKS, AS APPLICABLE.

U–ANCHOR ATTACHMENT:

11. INSTALL ATTACHMENTS IN ACCORDANCE WITH ANCHOR PRODUCTS INSTALLATION REQUIREMENTS AND RECOMMENDATIONS.
12. IN ACCORDANCE WITH ANCHOR PRODUCT RECOMMENDATIONS, U–ANCHOR 2400 PRODUCTS SHALL BE USED ON TPO, PVC, KEE AND EPDM SINGLE PLY ROOF MEMBRANES, U–ANCHOR 2600 PRODUCTS SHALL BE USED ON MODIFIED BITUMEN AND BUILT UP ROOF MEMBRANES, AND U–ANCHOR 2800 PRODUCTS SHALL BE USED ON COATED ROOF MEMBRANES.
13. SEE UNIRAC INSTALLATION MANUAL FOR CONNECTION OF RACKING ASSEMBLY TO U–ANCHOR PRODUCT WHERE REQUIRED PER UNIRAC DRAWINGS.
14. TRUFAST NO. 14 HD ROOFING FASTENERS OR NO. 15 EHD ROOFING FASTENERS OR APPROVED EQUAL SHALL BE USED PER TRUFAST INSTALLATION GUIDELINES FOR APPLICABLE ROOF DECK. CONTRACTOR TO USE (4) ROOF SCREWS TOTAL AT EACH CONNECTION. CONTRACTOR TO ALIGN (2) ROOF FASTENERS WITH WOOD ROOF MEMBERS AND MEET A 1" EMBEDMENT INTO THE WOOD ROOF MEMBERS WHERE POSSIBLE. FIELD VERIFY EXISTING ROOF ASSEMBLY THICKNESS TO MEET SPECIFIED EMBEDMENT DEPTH.
15. SEE BALLAST DISTRIBUTION PLAN IN UNIRAC DRAWING PACKAGE FOR LOCATION AND QUANTITY OF U–ANCHOR ATTACHMENTS AS APPLICABLE.

LOOSE GRAVEL MEMBRANE INTERFACE:

16. CONTRACTOR SHALL RELOCATE LOOSE GRAVEL TO EXPOSE SEALED ROOF MEMBRANE UNDER BASE MOUNTS OF RACKING ASSEMBLY AND CARE SHALL BE TAKEN TO NOT DAMAGE SEALED ROOF MEMBRANE BELOW LOOSE GRAVEL. CONTRACTOR SHALL BE RESPONSIBLE FOR REPAIRING ROOF MEMBRANE TO MATCH EXISTING CONDITION IF REQUIRED. RELOCATED GRAVEL SHALL BE EVENLY DISTRIBUTED ACROSS ROOF TO AVOID CONCENTRATED LOADS.
17. LOOSE GRAVEL RELOCATION SHALL NOT EXCEED A DEPTH OF 0.5 INCHES. CONTRACTOR SHALL NOTIFY ENGINEER OF RECORD IF LOOSE GRAVEL EXCEEDS THIS DEPTH PRIOR TO CONSTRUCTION.

ROOF MEMBRANE PROTECTION:

18. FURNISH AND INSTALL (BY SUBCONTRACTOR (75.0730)) SLIP SHEETS REQUIRED FOR FLAT ROOF RACKING SYSTEM. SLIP SHEETS SHALL: A) BE INSTALLED BETWEEN ALL RACKING CONTACT POINTS WITH FLAT ROOF, B) EXTEND 4 INCHES (+/– 0.5 INCH TOLERANCE) BEYOND EDGE OF INSTALLED COMPONENT ON ALL SIDES, AND C) BE COMPOSED OF PVC MEMBRANE MATERIAL FOR PVC ROOF MEMBRANES AND TPO MEMBRANE MATERIAL FOR ALL OTHER ROOF MEMBRANES WITH MINIMUM THICKNESS EQUAL TO 60 MIL. PVC MEMBRANE MATERIAL SHALL BE ADHERED TO THE EXISTING ROOF MEMBRANE BY HOT AIR WELDING THE PERIMETER OF THE SLIP SHEET AND TACK WELDING THE INTERIOR OF THE SLIP SHEET WHEN APPLIED.
19. SYSTEMS INSTALLED ON PVC ROOFS REQUIRE UNIRAC BALLAST BAYS WITH FIELD–INSTALLED SANTOPRENE PADS (FURNISH BY PURCHASER (65.7305), INSTALL BY SUBCONTRACTOR (75.0730)).
20. TO PROTECT THE ROOF FROM DAMAGE WHEN STAGING CONSTRUCTION MATERIALS ON THE ROOF SURFACE, TEMPORARY PROTECTION PADS (FURNISH AND INSTALL BY SUBCONTRACTOR (75.0730)) SHALL BE UTILIZED AT ALL POINTS OF CONTACT WITH THE FLAT ROOF.

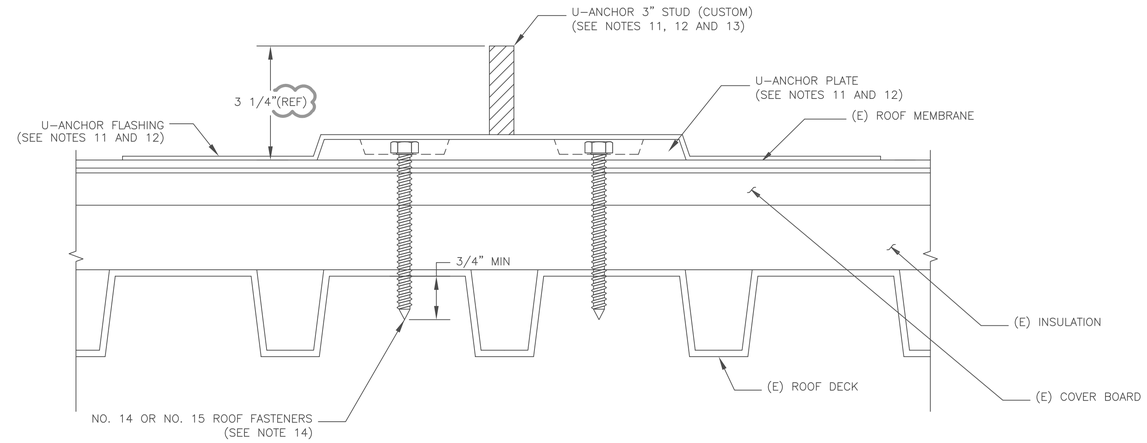


01 U–ANCHOR ATTACHMENT DETAIL

NOT TO SCALE
NOTE: FURNISH AND INSTALL BY SUBCONTRACTOR (75.0730) ALL U–ANCHOR COMPONENTS INCLUDING ROOF FASTENERS.

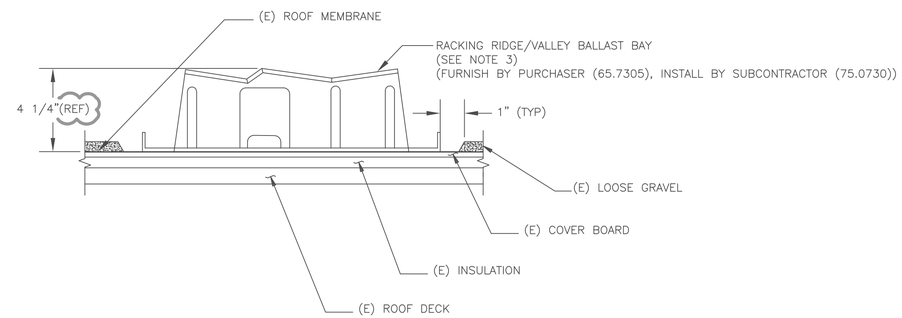


02 LOOSE GRAVEL MEMBRANE INTERFACE SECTION

NOT TO SCALE
(SEE NOTE 16 AND 17)

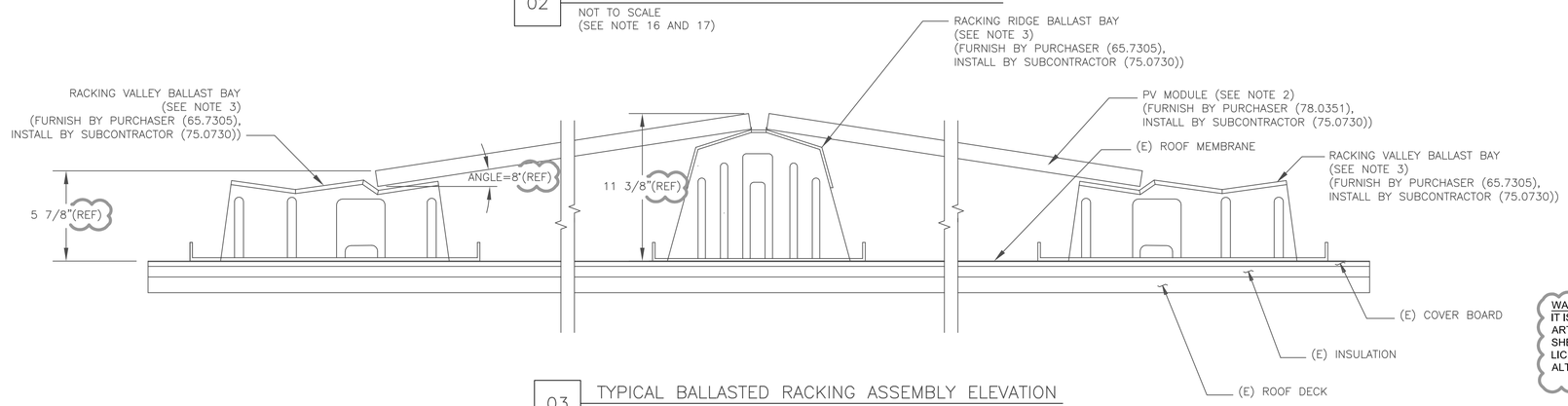


03 TYPICAL BALLASTED RACKING ASSEMBLY ELEVATION

NOT TO SCALE

WARNING:
IT IS A VIOLATION OF THE NYS EDUCATION LAW ARTICLE 145 FOR ANY PERSON, UNLESS HE OR SHE IS ACTING UNDER THE DIRECTION OF A LICENSED PROFESSIONAL ENGINEER, TO ALTER THIS ITEM IN ANY WAY.

APPROVED FOR CONSTRUCTION

THE DISTRIBUTION AND USE OF THE NATIVE FORMAT CAD FILE OF THIS DRAWING IS UNCONTROLLED. THE USER SHALL VERIFY TRACEABILITY OF THIS DRAWING TO THE LATEST CONTROLLED VERSION.

STATE OF NEW YORK · NATHANIEL ELLIS BOLDS JR. · LICENSED PROFESSIONAL ENGINEER · 102997

Date Signed: 03/24/2022
License Expires: 04/30/2023

| NO | DATE | REVISIONS AND RECORD OF ISSUE | DRN | DES | CHK | PDE | APP |
|---|---|---|---|---|---|---|---|
| 1 | 24/MAR/22 | APPROVED FOR CONSTRUCTION | IJR | NEB | SAS | NEB | NEB |
| 0 | 15/APR/21 | ISSUED FOR PERMITTING | WS | NEB | SAS | NEB | NEB |

I HEREBY CERTIFY THAT THIS DOCUMENT WAS PREPARED BY ME OR UNDER MY DIRECT SUPERVISION AND THAT I AM A DULY REGISTERED PROFESSIONAL ENGINEER UNDER THE LAWS OF THE STATE OF NEW YORK
SIGNED NATHANIEL ELLIS BOLDS, JR.
DATE 15/APR/21 REG NO. 102997

BLACK & VEATCH
BLACK & VEATCH NEW YORK, LLP
11404 LAMAR AVE, OVERLAND PARK, KS 66211
CERTIFICATE OF AUTHORIZATION NO. 0018346 EXP: 12/2023

DESIGNER NEB | DRAWN WS | CHECKED SAS | DATE 15/APR/21

J.P. MORGAN CHASE
TRANCHE 10 - NEW YORK

FLAT ROOF CONNECTION DETAILS

PROJECT
DRAWING NUMBER NY-STNDRD-SS10
REV 1
CODE
AREA

ANSI D 34x22
02/14/2017 04:16 PM

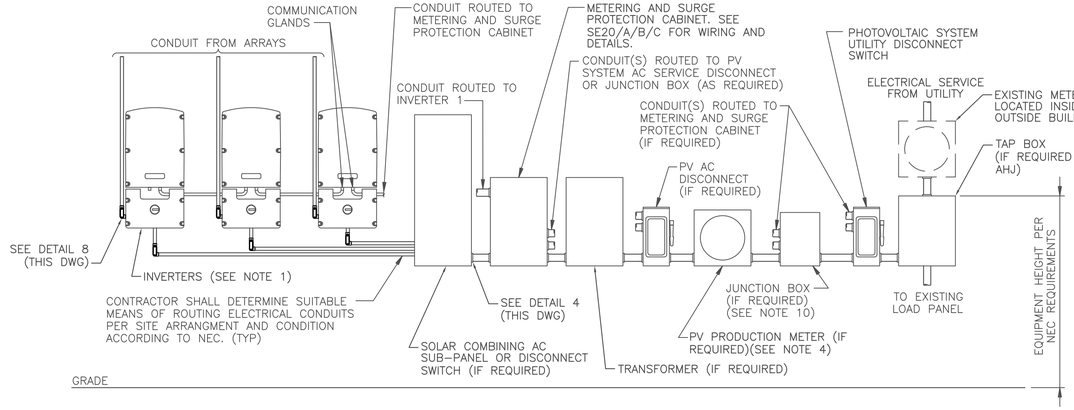


01 EQUIPMENT ELEVATION
NOT TO SCALE

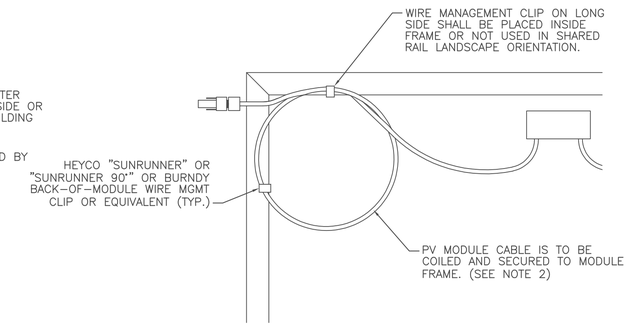


02 WIRE MANAGEMENT DETAIL
NOT TO SCALE

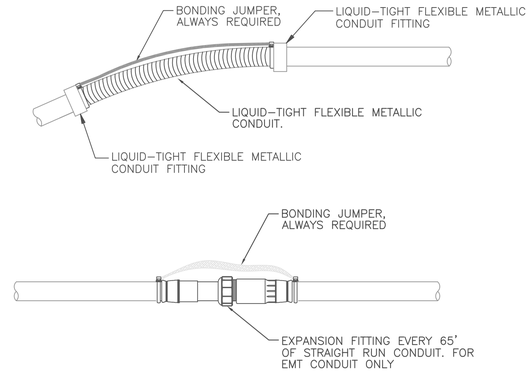


05 BONDING FOR CONDUIT CONNECTIONS
NOT TO SCALE

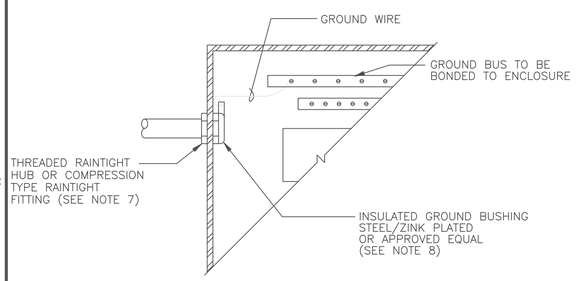


04 ENCLOSURE CONDUIT TERMINATION
NOT TO SCALE

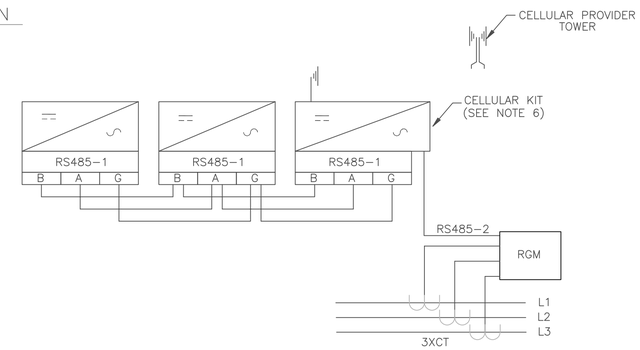


03 SINGLE OR MULTIPLE INVERTER DAS CONFIGURATION
NOT TO SCALE

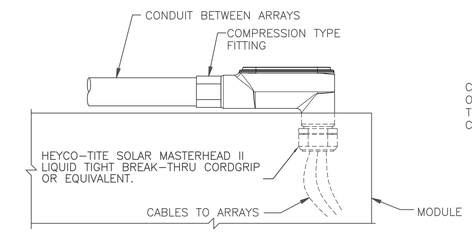


06 CONDUIT AND SEAL BETWEEN ARRAYS TOP VIEW
NOT TO SCALE

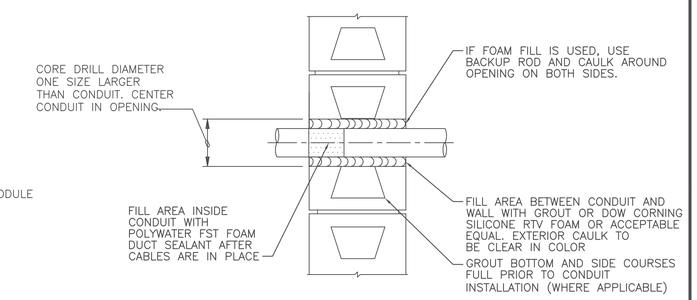


07 CONDUIT PENETRATION THROUGH WALL TYPICAL FOR ALL WALL TYPES

NOTES:

1. THE NUMBER OF INVERTERS WILL VARY BY DESIGN. CLEARANCES AND SPACING FOR INVERTERS SHALL BE DETERMINED FROM SOLAREDGE INSTALLATION MANUAL.
2. CABLE MANAGEMENT SHALL BE INSTALLED TO SUPPORT AND MAINTAIN ADEQUATE STRAIN RELIEF IN A NEAT AND WORKMANLIKE MANNER FOR A 25 YEAR INSTALLATION. SPACING OF SUPPORTS SHALL BE ADEQUATE TO AVOID CONTACT WITH THE ROOF SURFACE AS REQUIRED.
3. REFER TO RACKING VENDOR INSTALL MANUAL FOR RACK GROUNDING PROCEDURE.
4. LINE UP ORDER SHOWN IS FOR UTILITY INTERCONNECTIONS THAT REQUIRE A UTILITY PV PRODUCTION METER. A UTILITY PV PRODUCTION METER IS NOT REQUIRED FOR SOME INTERCONNECTION UTILITIES.
5. CONTRACTOR SHALL INSTALL DATA ACQUISITION SYSTEM (DAS) AS SHOWN ON DETAIL 3 AND ACCORDING TO INVERTER INSTALLATION MANUAL.
6. ONE CELLULAR KIT IS REQUIRED PER SITE. THE CELLULAR KIT SHALL BE INSTALLED IN INVERTER 1 (INV1). ALL CABLES ARE TO BE ROUTED IN CONDUIT.
7. ALL OUTDOOR CONDUITS TERMINATING AT ELECTRICAL EQUIPMENT SHALL TERMINATE AT EQUIPMENT WITH RAINTIGHT HUBS OR COMPRESSION TYPE, RAINTIGHT FITTINGS. WHERE CONDUIT KNOCKOUTS ARE NOT PROVIDED IN THE ELECTRICAL EQUIPMENT, CONTRACTOR SHALL LOCATE AND INSTALL CONDUIT TERMINATIONS AT LOCATIONS NOT TO NEGATIVELY IMPACT THE NEMA RATING OF THE EQUIPMENT ENCLOSURE. RAINTIGHT THREADED HUBS SHALL BE CROUSE-HINDS TYPE "HUB", OZ-GEDNEY TYPE "CH OR ENGINEER ACCEPTABLE EQUAL. COMPRESSION TYPE FITTINGS SHALL BE EATON CONNECTOR, NON-INSULATED, RAINTIGHT FITTINGS 650RTQ OR 651RTQ SERIES OR ENGINEER ACCEPTABLE EQUAL.
8. ALL CONDUITS TERMINATING AT ELECTRICAL EQUIPMENT SHALL BE INSTALLED WITH GROUNDING TYPE INSULATED BUSHINGS WITH INSULATING INSERTS AND BONDED TO THE EQUIPMENT GROUND WITH GREEN GROUND WIRE NOT LESS THAN 10AWG WIRE. GROUNDING TYPE INSULATING BUSHINGS SHALL BE OZ-GEDNEY TYPE IBC-L-BC OR ENGINEER ACCEPTABLE EQUAL.
9. CONDUIT DRAINS SHALL BE INSTALLED AT ALL LOW POINTS OF CONDUIT RUNS.
10. A JUNCTION BOX SHALL BE INSTALLED FOR THE REVENUE GRADE METER CONNECTIONS IF THE AC DISCONNECT HAS LIMITED SPACE TO INSTALL THE CT'S AND POWER TERMINATIONS.

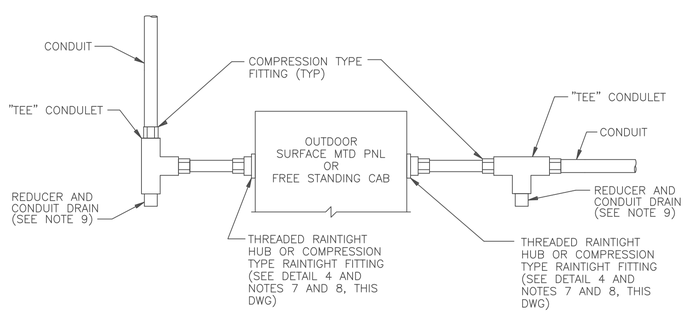


08 TYPICAL CONDUIT FOR SIDE ENTRY INTO OUTDOOR SURFACE MOUNTED PANEL OR FREE STANDING CABINET
NOT TO SCALE

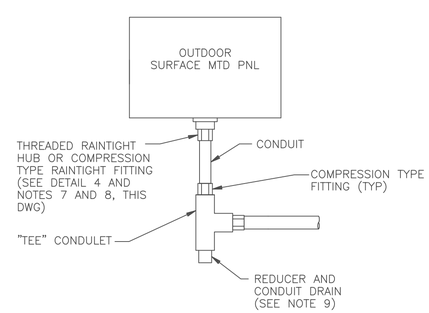


09 TYPICAL CONDUIT FOR BOTTOM ENTRY INTO OUTDOOR SURFACE MOUNTED PANEL

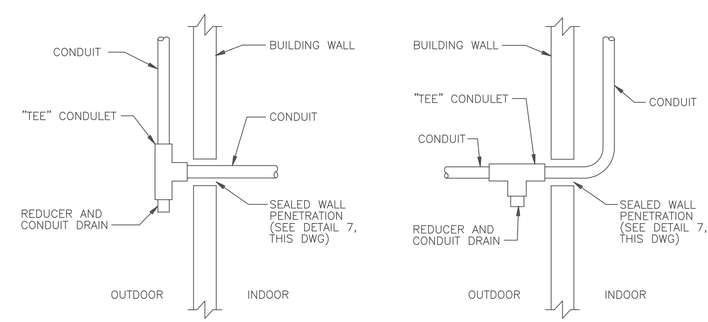


10 TYPICAL CONDUIT DRAIN AT EXTERIOR BUILDING WALL
NOT TO SCALE

ISSUED FOR PERMITTING
THE DISTRIBUTION AND USE OF THE NATIVE FORMAT CAD FILE OF THIS DRAWING IS UNCONTROLLED. THE USER SHALL VERIFY TRACEABILITY OF THIS DRAWING TO THE LATEST CONTROLLED VERSION.

STATE OF NEW YORK · BRIAN CAULEY ROGERS · 103183 · LICENSED PROFESSIONAL ENGINEER
Date Signed: 04/15/2021
License Expires: 06/30/2023

| NO | DATE | REVISIONS AND RECORD OF ISSUE | DRN | DES | CHK | PDE | APP |
|---|---|---|---|---|---|---|---|
| 0 | 15/APR/21 | ISSUED FOR PERMITTING | WS | JKT | NST | BCR | BCR |

I HEREBY CERTIFY THAT THIS DOCUMENT WAS PREPARED BY ME OR UNDER MY DIRECT SUPERVISION AND THAT I AM A DULY REGISTERED PROFESSIONAL ENGINEER UNDER THE LAWS OF THE STATE OF NEW YORK.
SIGNED BRIAN C. ROGERS
DATE 15/APR/21 REG NO. 103183

BLACK & VEATCH
BLACK & VEATCH NEW YORK, LLP 11404 LAMAR AVE, OVERLAND PARK, KS 66211
CERTIFICATE OF AUTHORIZATION NO. 0018348 EXP: 12/2023

DESIGNER JKT | DRAWN WS | CHECKED NST | DATE 15/APR/21

J.P. MORGAN CHASE
TRANCHE 10 - NEW YORK

ELECTRICAL DETAILS

PROJECT NY-STNDRD-SE10 | DRAWING NUMBER | REV 0
CODE
AREA

ANSI D 34x22
02/14/2017 04:16 PM

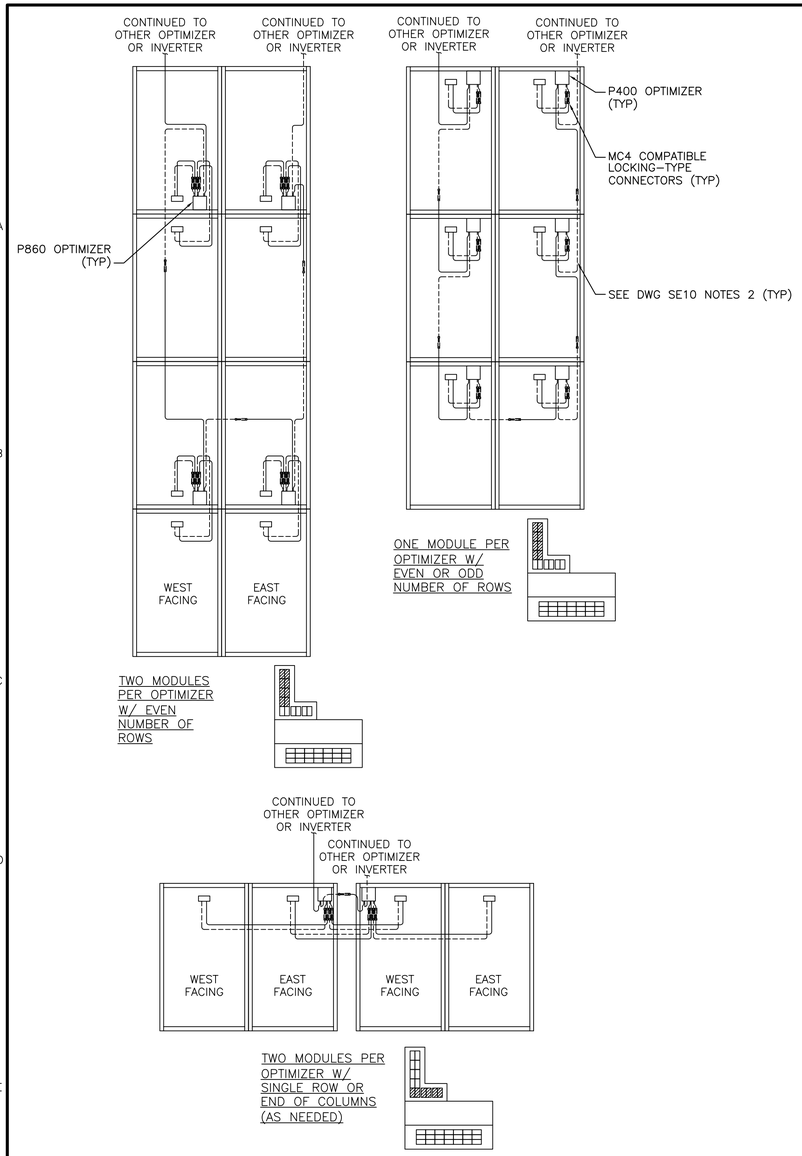


01 DUAL-TILT PV STRING WIRING DETAILS
NOT TO SCALE

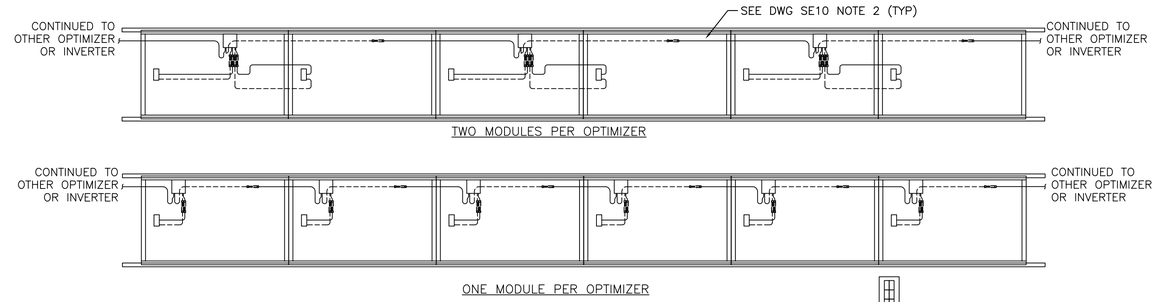


02 LANDSCAPE (PITCHED ROOF) PV STRING WIRING DETAILS
NOT TO SCALE

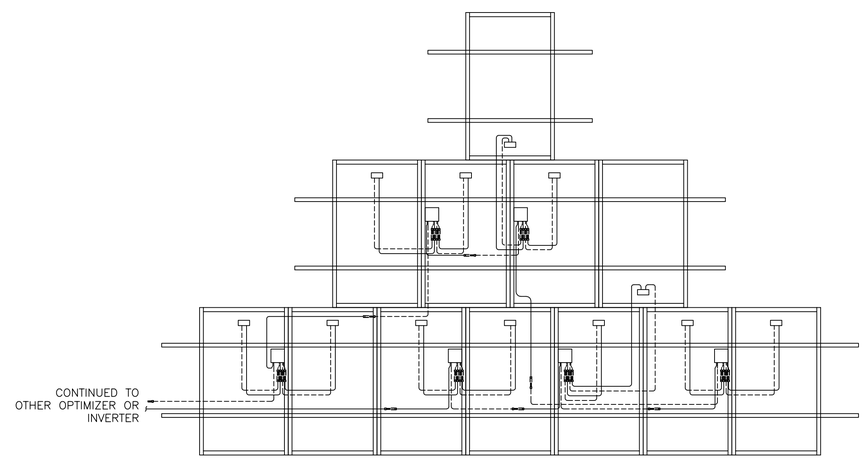


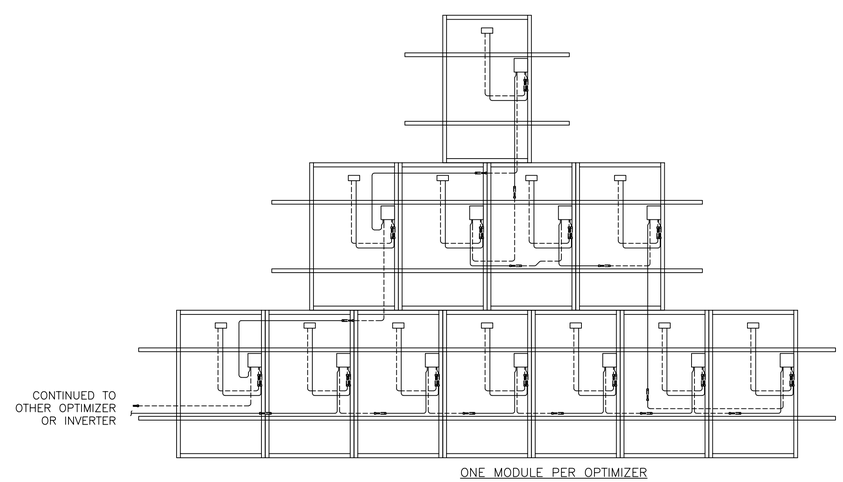


03 PORTRAIT DUAL RAIL (AS REQUIRED) PV STRING WIRING DETAILS
NOT TO SCALE

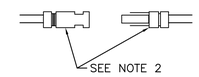


07 STAUBLI MC4 CONNECTOR
NOT TO SCALE

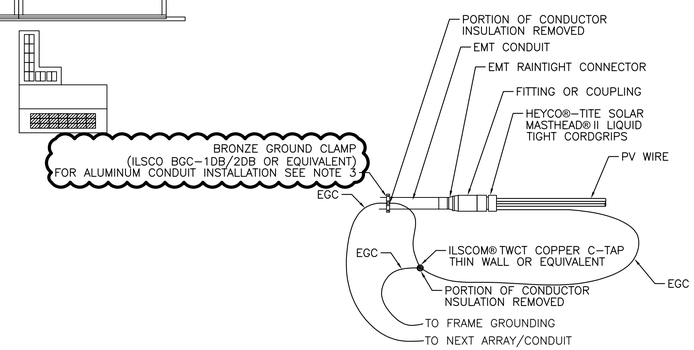


04 CONNECTOR ASSEMBLY
NOT TO SCALE

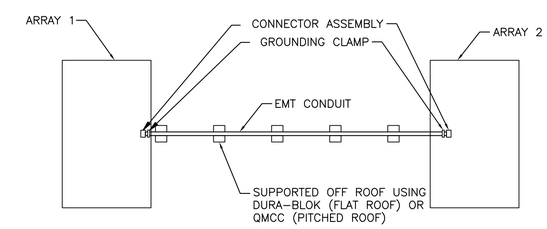


05 RACEWAY BETWEEM ARRAYS EXAMPLE
NOT TO SCALE

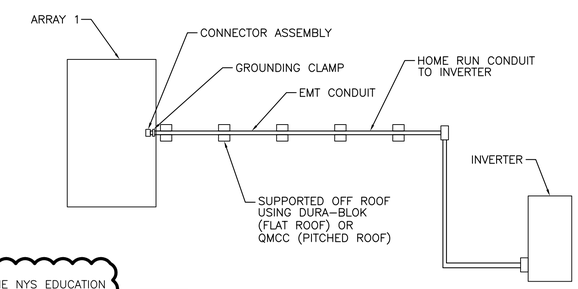


06 HOME RUN RACEWAY EXAMPLE
NOT TO SCALE

CABLE LEGEND

———— POSITIVE CABLES

- - - - - - - NEGATIVE CABLES

NOTES:

1. CONTRACTOR SHALL FOLLOW STRINGING PLAN ON SITE SPECIFIC PACKAGE AS MUCH AS POSSIBLE. WHEN NECESSARY TO DEVIATE FROM ENGINEER'S DESIGN, ENGINEER SHALL BE NOTIFIED NEW STRINGING PLAN SHALL BE PROVIDED.
2. CONTRACTOR SHALL FURNISH AND INSTALL CABLES WITH STAUBLI MC4 CONNECTORS FOR HOMERUN STRING TERMINATION AND CONDUCTORS IN THE SAME STRINGS BETWEEN SEPARATED ARRAYS. STAUBLI (PV-KBT4/5...-UR, PV-KST4/5...-UR, PV-KBT4/8II-UR AND PV-KST4/8II-UR ) BARREL CRIMP CONTACTS BE USED WITH THE MC4 CONNECTOR. STAUBLI (PV-CZM-23100) CRIMPING TOOL/DIE COMBINATION SHALL BE USED. MANUFACTURER'S INSTRUCTION SHALL BE FOLLOWED FOR INSTALLATION. MANUFACTURER'S TESTING TOOL (STAUBLI TEST PLUG PV-PST) SHALL BE USED AFTER ASSEMBLY.
3. ALUMINUM CONDUIT INSTALLATIONS WILL REQUIRE TINNED COPPER GROUND CLAMPS (HARGER CPC-.75/1.5/2 OR EQUIVALENT). COAT CONTACT SURFACE WITH OXIDE INHIBITOR.

WARNING:
IT IS A VIOLATION OF THE NYS EDUCATION LAW ARTICLE 145 FOR ANY PERSON, UNLESS HE OR SHE IS ACTING UNDER THE DIRECTION OF A LICENSED PROFESSIONAL ENGINEER, TO ALTER THIS ITEM IN ANY WAY.

ISSUED FOR PERMITTING
THE DISTRIBUTION AND USE OF THE NATIVE FORMAT CAD FILE OF THIS DRAWING IS UNCONTROLLED. THE USER SHALL VERIFY TRACEABILITY OF THIS DRAWING TO THE LATEST CONTROLLED VERSION.

STATE OF NEW YORK · BRIAN CAULEY ROGERS · 103183 · LICENSED PROFESSIONAL ENGINEER
Date Signed: 05/27/2021
License Expires: 06/30/2023

| NO | DATE | REVISIONS AND RECORD OF ISSUE | DRN | DES | CHK | PDE | APP |
|---|---|---|---|---|---|---|---|
| 1 | 27/MAY/21 | ISSUED FOR PERMITTING | UR | UR | NLJ | BCR | BCR |
| 0 | 15/APR/21 | ISSUED FOR PERMITTING | WS | JKT | NST | BCR | BCR |

I HEREBY CERTIFY THAT THIS DOCUMENT WAS PREPARED BY ME OR UNDER MY DIRECT SUPERVISION AND THAT I AM A DULY REGISTERED PROFESSIONAL ENGINEER UNDER THE LAWS OF THE STATE OF NEW YORK.
SIGNED BRIAN C. ROGERS
DATE 15/APR/21 REG NO. 103183

BLACK & VEATCH
BLACK & VEATCH NEW YORK, LLP 11404 LAMAR AVE, OVERLAND PARK, KS 66211
CERTIFICATE OF AUTHORIZATION NO. 0018348 EXP: 12/2023

DESIGNER JKT | DRAWN WS | CHECKED NST | DATE OPEN

J.P. MORGAN CHASE
TRANCHE 10 - NEW YORK

ELECTRICAL DETAILS NEC 2017

PROJECT NY-STNDRD-SE12 | DRAWING NUMBER | REV 1
CODE
AREA

ANSI D 34x22
02/14/2017 04:16 PM

SUBCONTRACTOR SHALL FOLLOW ONE OF THESE OPTIONS BASED ON THE SITE SPECIFIC CONDITIONS FOR INSTALLING THE VOLTAGE REFERENCE CONDUCTORS (VRC) FOR THE OWNER'S REVENUE METER. ON ANY SITE SUBCONTRACTOR HAS THE OPTION OF SWAPPING OUT THE LV TRANSFORMER LUGS FOR A MULTIPLE HOLE LUG AND MAKE THE TAP CONNECTION FOR THE OWNER'S REVENUE METER VOLTAGE REFERENCE CONDUCTORS AT THE TRANSFORMER INSTEAD OF AT THE AC DISCONNECT. SUBCONTRACTOR SHALL CONFIRM CLEARANCES FOR THE SPECIFIC SITE VOLTAGE(S) ARE MAINTAINED BETWEEN PHASE CONDUCTORS AND FROM PHASE CONDUCTOR TO GROUNDED SURFACE WHEN SWAPPING OUT LUGS. SUBCONTRACTOR SHALL MARK ANY CHANGES ON RED-LINE AS-BUILT SET.

1. VRC TO SW1 10' OR LESS FOLLOWING 240.21(B)(1)
2. VRC TO SW1 25' OR LESS FOLLOWING 240.21(B)(2), USE VRC CONDUCTOR SIZE BASED ON FUSE IN SW1
3. VRC TO SW1 UNLIMITED LENGTH, VRC CONDUCTOR AMPACITY EQUAL TO OR GREATER THAN SW1 FUSE (LIMITED UP TO #4 AWG)
4. VRC TO SW1 UNLIMITED LENGTH, SUBCONTRACTOR SHALL PURCHASE AND INSTALL 30A FUSED DISCONNECT SWITCH ADJACENT TO SW1

| 240.21(B)(2) 25' TAP RULE | |
|---|---|
| VRC CONDUCTOR SIZE | MAX SW1 FUSE SIZE (A) |
| 10 AWG | 105 |
| 8 AWG | 150 |
| 6 AWG | 195 |
| 4 AWG | 255 |

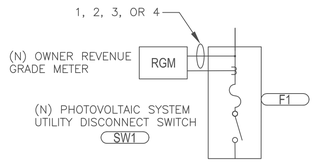


04 OWNERS REVENUE METER VOLTAGE REFERENCE CONDUCTORS (VRC)
NOT TO SCALE

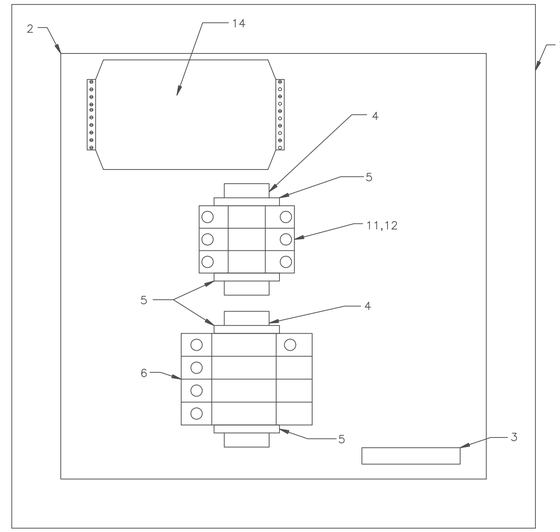


01 TYPICAL PANEL LAYOUT
NOT TO SCALE

## BILL OF MATERIAL

| ITEM | QTY | MANUFACTURER | MODEL | DESCRIPTION |
|---|---|---|---|---|
| | DETAIL 01 | (OR EQUIVALENT) | | |
| 1 | 1 | HOFFMAN | A16R166HCR (A16H1606SSLP 4X) | 16"x16"x6" ENCLOSURE, NEMA 3R OR NEMA 4X |
| 2 | 1 | HOFFMAN | A16P16G | 13"x13" SUBPANEL |
| 3 | 1 | EATON | GBK5 | GROUND LUG KIT |
| 4 | AS REQ'D | PHOENIX | 0801733 | 35MM DIN RAIL CUT TO LENGTH |
| 5 | 4 | PHOENIX | 0800886 | END CLAMP (E-NS-35-N) |
| 6 | 1 | MERSEN | STP208YN07 | 208V AC PV SURGE PROTECTOR, 4P, DIN RAIL, TYPE 2, NOMINAL DISCHARGE CURRENT 20KA, MAX DISCHARGE CURRECT 75KA |
| 7 | NOT USED | | | |
| 8 | NOT USED | | | |
| 9 | NOT USED | | | |
| 10 | NOT USED | | | |
| 11 | 1 | BUSSMANN | CHCC3DU | CH MODULAR, IP20 FINGER-SAFE, DIN RAIL HOLDER FOR CLASS CC FUSES |
| 12 | 3 | BUSSMANN | KTK-R-1/2 | LIMITRON KTK-R CLASS CC 600VAC 0.5A FAST-ACTING FUSES, SCCR 200kA |
| 13 | 3 | CONTINENTAL CONTROL SYSTEMS | ACTL-1250-XXX OPT C0.3 (NOTE 3) | REVENUE GRADE, SPLIT-CORE CURRENT TRANSFORMERS, IEEE C57.13 CLASS 0.3 |
| 14 | 1 | CONTINENTAL CONTROL SYSTEMS | RWND-3D-240-MB | WATTNODE MODBUS REVENUE GRADE METER, 208-240 V SINGLE OR THREE PHASE SYSTEMS |
| 15 | NOT USED | | | |
| 16 | 1 | ENCL. MFR STD | ENCL. MFR STD | MASTER KEYING LOCK |

## LEGEND

EXTERNAL WIRING
FACTORY INTERNAL WIRING

## NOTES:

1. USE DRAWING E20 OF THE SITE SPECIFIC DESIGN DRAWINGS FOR ACTUAL CONNECTION POINTS.
2. SEE SE20A FOR SINGLE PHASE SYSTEMS AND SE20B FOR 480V SYSTEMS.
3. USE TABLE 1 AND DRAWING E20 OF THE SITE SPECIFIC DESIGN DRAWINGS TO CHOOSE THE APPROPRIATE MODEL NUMBER BASED ON SYSTEM AC CAPACITY.
4. THE CT LEADS SHALL BE EXTENDED WHERE THE STANDARD CT LEADS ARE NOT LONG ENOUGH. REFER TO CONTINENTAL CONTROL SYSTEMS LLC CT WIRE EXTENSION APPLICATION NOTE. THE EXTENSION WIRES SHALL MEET THE FOLLOWING REQUIRMENTS:
   a. MINIMUM 18 AWG
   b. TWISTED PAIR, 1 TWIST PER INCH
   c. 600V RATED
   d. LISTED TO UL 1015
5. SITES WITHIN 2 MILES OF A BODY OF SALT WATER SHALL HAVE NEMA 4X RATED ENCLOSURES. NEMA 4X RATED ENCLOSURES ARE DENOTED BY AN "X" AFTER THE NUMBER IN THE DETAIL.
6. FOR WATTNODE METER, ALIGN THE WHITE WIRE WITH THE WHITE DOT ON THE LABEL, AND THE BLACK WIRE WITH THE BLACK DOT.
7. TERMINATE TO CLOSEST GROUNDING ELECTRODE. THE CONDUCTORS USED TO CONNECT THE SPD TO GROUND SHALL NOT BE ANY LONGER THAN NECESSARY AND SHALL AVOID UNNECESSARY BENDS.
8. NOT USED
9. NOT USED
10. ALL CABLES SHALL HAVE A MINIMUM OF 600V INSULATION RATING.

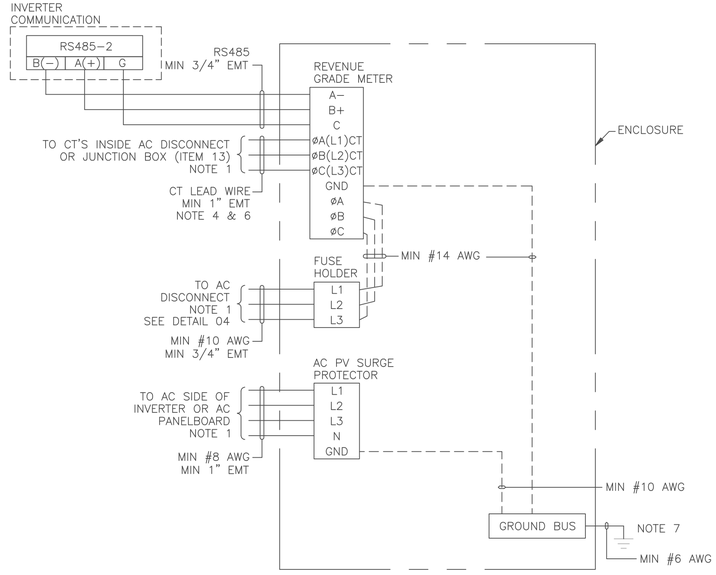


02 TYPICAL WIRING DIAGRAM
NOT TO SCALE

| TABLE 1 | | | |
|---|---|---|---|
| BOM REF | PHASE | AC CAPACITY (KW) | MODEL NUMBER |
| H | 3 | LESS THAN 80 KW | ACTL-1250-250 OPT C0.3 |
| J | 3 | LESS THAN 142 KW AND GREATER THAN 80 KW | ACTL-1250-400 OPT C0.3 |
| K | 3 | LESS THAN 210 KW AND GREATER THAN 142 KW | ACTL-1250-600 OPT C0.3 |

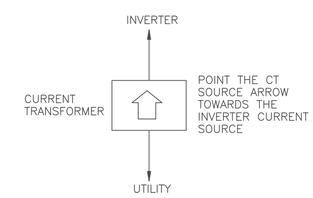


03 CONNECTING THE CURRENT TRANSFORMER
NOT TO SCALE

WARNING:
IT IS A VIOLATION OF THE NYS EDUCATION LAW ARTICLE 145 FOR ANY PERSON, UNLESS HE OR SHE IS ACTING UNDER THE DIRECTION OF A LICENSED PROFESSIONAL ENGINEER, TO ALTER THIS ITEM IN ANY WAY.

APPROVED FOR CONSTRUCTION
THE DISTRIBUTION AND USE OF THE NATIVE FORMAT CAD FILE OF THIS DRAWING IS UNCONTROLLED. THE USER SHALL VERIFY TRACEABILITY OF THIS DRAWING TO THE LATEST CONTROLLED VERSION.

STATE OF NEW YORK · BRIAN CAULEY ROGERS · 103183 · LICENSED PROFESSIONAL ENGINEER
Date Signed: 03/24/2022
License Expires: 06/30/2023

| NO | DATE | REVISIONS AND RECORD OF ISSUE | DRN | DES | CHK | PDE | APP |
|---|---|---|---|---|---|---|---|
| 1 | 24/MAR/22 | APPROVED FOR CONSTRUCTION | IJR | IJR | NST | BCR | BCR |
| 0 | 15/APR/21 | ISSUED FOR PERMITTING | WS | JKT | NST | BCR | BCR |

I HEREBY CERTIFY THAT THIS DOCUMENT WAS PREPARED BY ME OR UNDER MY DIRECT SUPERVISION AND THAT I AM A DULY REGISTERED PROFESSIONAL ENGINEER UNDER THE LAWS OF THE STATE OF NEW YORK.
SIGNED BRIAN C. ROGERS
DATE 15/APR/21 REG NO. 103183

BLACK & VEATCH
BLACK & VEATCH NEW YORK, LLP 11404 LAMAR AVE, OVERLAND PARK, KS 66211
CERTIFICATE OF AUTHORIZATION NO. 0018346 EXP: 12/2023

| DESIGNER | DRAWN |
|---|---|
| JKT | WS |
| CHECKED NST | DATE 15/APR/21 |

J.P. MORGAN CHASE
TRANCHE 10 - NEW YORK

METERING AND SURGE PROTECTION DETAILS 3-PHASE (208V)

PROJECT NY-STNDRD-SE20C
DRAWING NUMBER
REV 1
CODE
AREA

ANSI D 34x22
02/14/2017 04:16 PM

solaredge

# Power Optimizer
## for North America
P730 / P800p / P850

POWER OPTIMIZER

### PV power optimization at the module-level
**The most cost effective solution for commercial and large field installations**

- Specifically designed to work with SolarEdge inverters
- Up to 25% more energy
- Superior efficiency (99.5%)
- Balance of System cost reduction; 50% less cables, fuses and combiner boxes, over 2x longer string lengths possible
- Fast installation with a single bolt
- Advanced maintenance with module-level monitoring
- Module-level shutdown for installer and firefighter safety
- Compliant with arc fault protection and rapid shutdown NEC requirements (when installed as part of the SolarEdge system)
- Use with two PV modules connected in series or in parallel

www.solaredge.us

NEC 2011/2014 THREE PHASE OPTIMIZER (PG 1)

# Power Optimizer
## For North America
P860

POWER OPTIMIZER

### PV power optimization at the module-level
**The most cost effective solution for commercial and large field installations**

- Specifically designed to work with SolarEdge inverters
- Up to 25% more energy
- Superior efficiency (99.5%)
- Balance of System cost reduction; 50% less cables, fuses and combiner boxes, over 2x longer string lengths possible
- Fast installation with a single bolt
- Advanced maintenance with module-level monitoring
- Module-level voltage shutdown for installer and firefighter safety
- Meets NEC requirements for arc fault protection (AFCI) and Photovoltaic Rapid Shutdown System (PVRSS)
- Use with two PV modules connected in parallel

solaredge.com

NEC 2011/2014 THREE PHASE OPTIMIZER (PG 2)

# Power Optimizer
## For North America
P860

POWER OPTIMIZER

### PV power optimization at the module-level
**The most cost effective solution for commercial and large field installations**

- Specifically designed to work with SolarEdge inverters
- Up to 25% more energy
- Superior efficiency (99.5%)
- Balance of System cost reduction; 50% less cables, fuses and combiner boxes, over 2x longer string lengths possible
- Fast installation with a single bolt
- Advanced maintenance with module-level monitoring
- Module-level voltage shutdown for installer and firefighter safety
- Meets NEC requirements for arc fault protection (AFCI) and Photovoltaic Rapid Shutdown System (PVRSS)
- Use with two PV modules connected in parallel

solaredge.com

NEC 2017 THREE PHASE OPTIMIZER (PG 1)

# Power Optimizer
## For North America
P860

| Optimizer Model (typical module compatibility) | P860 (for 60-cell PV modules) | |
|---|---|---|
| **INPUT** | | |
| Rated Input DC Power[1] | 850 | W |
| Connection type | Dual inputs for independently connected modules | |
| Absolute Maximum Input Voltage (Voc at lowest temperature) | 80 | Vdc |
| MPPT Operating Range | 12.5 - 80 | Vdc |
| Maximum Short Circuit Current (Isc) | 22 | Adc |
| Maximum Short Circuit Current per input (Isc) | 11 | Adc |
| Maximum Efficiency | 99.5 | % |
| Weighted Efficiency | 98.8 | % |
| Overvoltage Category | II | |
| **OUTPUT DURING OPERATION (POWER OPTIMIZER CONNECTED TO OPERATING SOLAREDGE INVERTER)** | | |
| Maximum Output Current | 18 | Adc |
| Maximum Output Voltage | 85 | Vdc |
| **OUTPUT DURING STANDBY (POWER OPTIMIZER DISCONNECTED FROM SOLAREDGE INVERTER OR SOLAREDGE INVERTER OFF)** | | |
| Safety Output Voltage per Power Optimizer | 1 ± 0.1 | Vdc |
| **STANDARD COMPLIANCE** | | |
| Photovoltaic Rapid Shutdown System | Compliant with NEC 2014, 2017[2] | |
| EMC | FCC Part15 Class B, IEC61000-6-2, IEC61000-6-3 | |
| Safety | IEC62109-1 (class II safety), UL1741 | |
| Material | UL-94 (5-VA), UV Resistant | |
| RoHS | Yes | |
| **INSTALLATION SPECIFICATIONS** | | |
| Compatible SolarEdge Inverters | Three phase inverters | |
| Maximum Allowed System Voltage | 1000 | Vdc |
| Dimensions (W x L x H) | 128 x 152 x 19 / 5 x 6.03 x 0.75 | mm / in |
| Weight (including cables) | 1064 / 2.34 | gr / lb |
| Input Connector | MC4 Dual Inputs[3] | |
| Output Wire Type / Connector | Double Insulated MC4 | |
| Output Wire Length | 0.16 / 0.52 | m / ft |
| Operating Temperature Range[4] | -40 - +85 / -40 - +185 | °C / °F |
| Protection Rating | IP68 / NEMA6P | |
| Relative Humidity | 0 - 100 | % |

[1] Rated STC power of the module. Module of up to +5% power tolerance allowed.
[2] NEC 2017 requires max combined DC voltage for rapid shutdown of 80V
[3] In case of solid number of PV modules in one string, it is allowed to connect one P860 power optimizer connected to one PV module. When connecting a single module to P860, both the relevant input connectors with the supplied single end pair of cable.
[4] For ambient temperature above +45°C / +113°F power de-rating is applied. Refer to Power Optimizer Temperature De-rating Application Note for more details.

| PV System Size Vs. Number of Optimizers[1] | | Three Phase 208V[2] | Three Phase 480V | |
|---|---|---|---|---|
| Minimum String Length | Power Optimizers | 8 | 18 | |
| | PV Modules | 16 | 36 | |
| Maximum String Length | Power Optimizers | 52 | | |
| | PV Modules | 52 | | |
| Maximum Power per String | | 7200 | 11400 | W |
| Parallel Strings of Different Lengths or Orientations | | Yes | | |

[1] It is not a must to mix P860 with P320/P340/P350/P370 in one string or to mix with P321/P321D/P401/P405 in one string.
[2] P860 design will three phase 208V inverters is limited. Use the SolarEdge Designer for verification.



CE RoHS

NEC 2017 THREE PHASE OPTIMIZER (PG 2)

solaredge

# Three Phase Inverters
## for the 277/480V Grid for North America
SE10KUS / SE20KUS / SE30KUS / SE33.3KUS

INVERTERS

### The best choice for SolarEdge enabled systems

- Specifically designed to work with power optimizers
- Quick and easy inverter commissioning directly from a smartphone using the SolarEdge SetApp
- Superior efficiency (98%)
- Integrated arc fault protection and rapid shutdown for NEC 2014 and 2017, per article 690.11 and 690.12
- UL1741 SA certified, for CPUC Rule 21 grid compliance
- Built-in module-level monitoring
- Internet connection through Ethernet or Wireless
- Small, lightweight, and easy to install outdoors or indoors on provided bracket
- Fixed voltage inverter for longer strings
- Integrated Safety Switch
- Supplied with RS485 Surge Protection Device, to better withstand lightning events

THREE PHASE INVERTER (PG1)

solaredge

**Three Phase Inverters for the 277/480V Grid[1] for North America**
SE10KUS / SE20KUS / SE30KUS / SE33.3KUS

| | SE10KUS | SE20KUS | SE30KUS | SE33.3KUS | |
|---|---|---|---|---|---|
| APPLICABLE TO INVERTERS WITH PART NUMBER | SE XXX-XXXXXBXX4 | | | | |
| OUTPUT | | | | | |
| Rated AC Power Output | 10000 | 20000 | 30000 | 33300 | VA |
| Maximum AC Power Output | 10000 | 20000 | 30000 | 33300 | VA |
| AC Output Line Connection | 3 phase, 4-wire / PE (L1-L2-L3-N), TN, TT | | | | |
| AC Output Voltage Min/Nom-Nominal-Maximum[2] (L-N) | 244-277-305 | | | | Vac |
| AC Output Voltage Min/Nom-Nominal-Maximum[2] (L-L) | 422.5-480-528 | | | | Vac |
| AC Frequency Min-Nom-Max[2] | 59.3 - 60 - 60.5 | | | | Hz |
| Max. Continuous Output Current (per Phase) | 13 | 24 | 36.5 | 40 | A |
| GFCI Threshold | 1 | | | | A |
| Utility Monitoring, Islanding Protection, Country Configurable Set Points | Yes | | | | |
| THD | < 3 | | | | % |
| INPUT | | | | | |
| Maximum DC Power (Module STC) | 13500 | 27000 | 40500 | 45000 | W |
| Transformer-less, Ungrounded | Yes | | | | |
| Maximum Input Voltage DC to Grid | 480 | | | | Vdc |
| Maximum Input Voltage DC+ to DC- | 1000 | | | | Vdc |
| Nominal Input Voltage DC to Grid | 420 | | | | Vdc |
| Nominal Input Voltage DC+ to DC- | 840 | | | | Vdc |
| Maximum Input Current | 13.5 | 26.5 | 39 | 40 | Adc |
| Maximum Input Short Circuit Current | 45 | | | | Adc |
| Reverse-Polarity Protection | Yes | | | | |
| Ground-Fault Isolation Detection | 1MΩ Sensitivity | | 350kΩ Sensitivity[3] | | |
| CEC Weighted Efficiency | 98 | | 98.5 | | % |
| Night-time Power Consumption | < 3 | | < 4 | | W |
| ADDITIONAL FEATURES | | | | | |
| Supported Communication Interfaces | 2 x RS485, Ethernet, Built-in GSM (optional) | | | | |
| Inverter Commissioning | With the SetApp mobile application using built-in Wi-Fi station for local connection | | | | |
| Rapid Shutdown – NEC 2014 and 2017 690.12 | Automatic Rapid Shutdown upon AC Grid Disconnect[4] | | | | |
| RS485 Surge Protection | Supplied with the inverter | | | | |
| Smart Energy Management | Export Limitation | | | | |
| STANDARD COMPLIANCE | | | | | |
| Safety | UL1741, UL1741 SA, UL16998, CSA C22.2, Canadian AFCI according to T.I.L. M-07 | | | | |
| Grid Connection Standards | IEEE1547, Rule 21, Rule 14 (HI) | | | | |
| Emissions | FCC part15 class B | | | | |
| INSTALLATION SPECIFICATIONS | | | | | |
| AC output conduit size / AWG range | 3/4" minimum / 12-6 AWG | | 3/4" minimum / 8-4 AWG | | |
| DC input conduit size / AWG range | 3/4" minimum / 12-6 AWG | | | | |
| Number of DC inputs | 2 pairs | | 3 pairs[5] | | |
| Dimensions (H x W x D) | 21 x 12.5 x 10.5 / 540 x 315 x 260 | | | | in / mm |
| Dimensions with Safety Switch (H x W x D) | 30.5 x 12.5 x 10.5 / 775 x 315 x 260 | | | | in / mm |
| Weight | 22.2 / 10.2 | | 38.8 / 17.6 | | lb / kg |
| Weight with Safety Switch | 25.1 / 11.4 | | 41.8 / 18.9 | | lb / kg |
| Cooling | Fans (user replaceable) | | | | |
| Noise | < 50 | | < 55 | | dBA |
| Operating Temperature Range | -40 to +140 / -40 to +60[6] | | | | °F / °C |
| Protection Rating | NEMA 3R | | | | |

[1] For 230/208V inverters refer to: https://www.solaredge.com/files/pdfs/Three-phase-inverter-208-wye-connection.pdf
[2] For other regional settings please contact SolarEdge support.
[3] Higher current may be used regardless
[4] Rapid shutdown kit must be installed to connect the inverter to a Rapid Shutdown for NEC 2014 compliance (NEC 2017 compliance with sunrise breaker)
[5] Field replaceable SE30K for 1 pair of inputs. P/N: 2028-2-P4-2SB. Field replacement kit for 2 pairs of fuses and holders. P/N: 2028-2-P4-4-FUSE-KIT.
[6] For power de-rating information refer to: https://www.solaredge.com/files/pdfs/ul-temperature-de-rating-application-note.pdf

WARNING:
IT IS A VIOLATION OF THE NYS EDUCATION LAW ARTICLE 145 FOR ANY PERSON, UNLESS HE OR SHE IS ACTING UNDER THE DIRECTION OF A LICENSED PROFESSIONAL ENGINEER, TO ALTER THIS ITEM IN ANY WAY.

RoHS

THREE PHASE INVERTER (PG 2)

RESIDENTIAL | COMMERCIAL | UTILITY

# MSE PERC 72
## High Power PERC Module

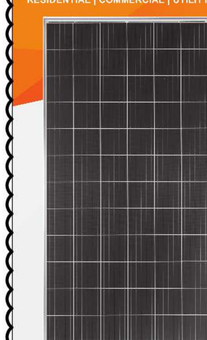

**CERTIFIED RELIABILITY**
› Tested to UL1703 & IEC standards
› PID resistant

**ADVANCED TECHNOLOGY**
› PERC and 5 busbar drive >19.3% module efficiency
› Ideal for all applications

**EXTREME WEATHER RESILIENCE**
› 5631 Pa front and back load (117 psf) tested load to UL1703

**BAA COMPLIANT FOR GOVERNMENT PROJECTS**
› Buy American Act
› American Recovery & Reinvestment Act

25-YEAR[1]

MADE AGAINST DUMPING & SUBSIDIES IN THE USA

380-390W
CLASS LEADING POWER OUTPUT

19.35%
MAXIMUM EFFICIENCY

-0~+3%
POSITIVE POWER TOLERANCE

**PRODUCT AND POWER WARRANTY**


**CERTIFICATIONS**
IEC 61215/ IEC 61730/ IEC 61701/ UL 1703/ Salt mist

LISTED CEC

Please contact Mission Solar Energy if you have questions or concerns about certifications of our products in your area.

[1] Standard 12-year product warranty extendable to 25 years with registration.

**High-Power, American Quality**
Mission Solar Energy is headquartered in San Antonio, TX with module production facilities on-site. We produce American quality solar modules ensuring the highest power output and reliability to our customers. Our product line is well suited for residential, commercial and utility applications. Every Mission Solar Energy solar module is certified and surpasses industry standard regulations, proving excellent performance over the long-term.

www.missionsolar.com | info@missionsolar.com
210.884.8181 | 4041 Ingram Road San Antonio, TX 78228

MISSION SOLAR ENERGY

STATE OF NEW YORK · BRIAN CAULEY ROGERS · 103183 · LICENSED PROFESSIONAL ENGINEER

Date Signed: 03/24/2022
License Expires: 06/30/2023

SOLAR PANEL (PG 1)

## ELECTRICAL SPECIFICATIONS

**Electrical Parameters at Standard Test Conditions (STC)**

| Module Type | | | MSE385SR6S | MSE385SR6S | MSE390SR6S |
|---|---|---|---|---|---|
| **Power Output** | Pmax | Wp | 380 | 385 | 390 |
| Module Efficiency | | % | 18.66 | 19.11 | 19.35 |
| **Tolerance** | | | 0~+3% | 0~+3% | 0~+3% |
| Short-Circuit Current | Isc | A | 9.968 | 9.993 | 10.024 |
| **Open Circuit Voltage** | Voc | V | 48.31 | 48.83 | 48.98 |
| Rated Current | Imp | A | 9.385 | 9.426 | 9.499 |
| **Rated Voltage** | Vmp | V | 40.48 | 40.84 | 41.05 |
| Fuse Rating | | | 20 | 20 | 20 |

## TEMPERATURE COEFFICIENTS

| | |
|---|---|
| Normal Operating Cell Temperature (NOCT) | 46.43°C (±2°C) |
| **Temperature Coefficient of Pmax** | **-0.375%/°C** |
| Temperature Coefficient of Voc | -0.280%/°C |
| **Temperature Coefficient of Isc** | **0.045%/°C** |

## OPERATING CONDITIONS

| | |
|---|---|
| Maximum System Voltage | 1,500Vdc or 1000Vdc |
| **Operating Temperature Range** | **-40°C (-40°F) to +85°C (185°F)** |
| Maximum Series Fuse Rating | 20A |
| **Fire Safety Classification** | **Type 1, Class C** |
| Front & Back Load (UL standard) | 5631 Pa (117 psf) Tested to UL1703 standard |
| **Hail Safety Impact Velocity** | **25mm at 23 m/s** |

## MECHANICAL DATA

| | |
|---|---|
| Solar Cells | P-type mono-crystalline silicon (156.75mm) |
| **Cell Orientation** | **72 cells (6x12), 5 busbar** |
| Module Dimension | 1999mm x 1008mm x 40mm (78.7 in. x 39.68 in. x 1.58 in.) |
| **Weight** | **23 kg (50 lb)** |
| Front Glass | 3.2mm (0.126 in.) tempered, low-iron, anti-reflective coating |
| **Frame** | **Anodized aluminum alloy** |
| Encapsulant | Ethylene vinyl acetate (EVA) |
| **J-Box** | **Protection class IP67 with 3 bypass-diodes** |
| Cables | PV wire, 1.2m (47.24 in.), 4mm² / 12 AWG |
| **Connector** | **MC4 Compatible** |

## SHIPPING INFORMATION

| Container | FT | | Pallets | Panels | 385 W |
|---|---|---|---|---|---|
| 53' | | Double stack | 30 | 780 | 300.30 kW |
| 40' | | Double stack | 24 | 624 | 240.24 kW |
| | Pallets | | Weight | Height | Width | Length |
| Pallet | | 26 | 1,414lbs | 42.45" | 45.50" | 79.50" |

Mission Solar Energy reserves the right to make specification changes without notice
DOCUMENT NO. 2-MM-MUS-2020 REVISED FEBRUARY 6, 2020 REVISION NUMBER: 01.02

## CERTIFICATIONS & TESTS

IEC
61215 / 61730 / 61701 / Salt mist
UL
UL 1703 listed

CE

**MSE385SR6S: 385WP, 72 CELL SOLAR MODULE CURRENT - VOLTAGE CURVE**

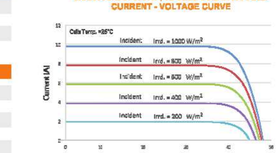


Current-voltage characteristics with dependence on irradiance and module temperature

**BASIC DESIGN (UNITS: mm)**

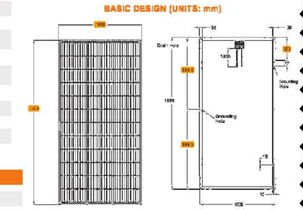


SOLAR PANEL (PG 2)

APPROVED FOR CONSTRUCTION
THE DISTRIBUTION AND USE OF THE NATIVE FORMAT CAD FILE OF THIS DRAWING IS UNCONTROLLED. THE USER SHALL VERIFY TRACEABILITY OF THIS DRAWING TO THE LATEST CONTROLLED VERSION.

| NO | DATE | REVISIONS AND RECORD OF ISSUE | DRN | DES | CHK | PDE | APP |
|---|---|---|---|---|---|---|---|
| 1 | 24/MAR/22 | APPROVED FOR CONSTRUCTION | JJR | JJR | NST | BCR | BCR |
| 0 | 15/APR/21 | ISSUED FOR PERMITTING | WS | JKT | NST | BCR | BCR |

I HEREBY CERTIFY THAT THIS DOCUMENT WAS PREPARED BY ME OR UNDER MY DIRECT SUPERVISION AND THAT I AM A DULY REGISTERED PROFESSIONAL ENGINEER UNDER THE LAWS OF THE STATE OF NEW YORK.
SIGNED BRIAN C. ROGERS
DATE 15/APR/21 REG NO. 103183

BLACK & VEATCH
BLACK & VEATCH NEW YORK, LLP
11404 LAMAR AVE, OVERLAND PARK, KS 66211
CERTIFICATE OF AUTHORIZATION NO. 0018348 EXP: 12/2023

| DESIGNER | DRAWN |
|---|---|
| JKT | WS |
| CHECKED NST | DATE 15/APR/21 |

J.P. MORGAN CHASE
TRANCHE 10 - NEW YORK

THREE PHASE SYSTEM CUTSHEETS

NY-STNDRD-SR10 | 1

CODE
AREA

ANSI D 34x22
02/14/2017 04:16 PM

ILSCO

## KUP-L-TAP® (IPC) Insulation Piercing (Dual Rated)

- Kup-L-Tap(R) insulation piercing connector.
- Body is molded from tough, resilient glass-filled nylon.
- UL 486A/B 90° C Listed and is CSA Certified.
- For use with stranded conductor Class B or C
- Compact design.
- Tin Plated copper contact teeth and pre-filled with silicone lubricant.
- Removable end tabs.
- Dual Rated for Copper and Aluminum Conductor.
- UL File E6207

| Item ID | Figure Number | Conductor Range Main | Conductor Range Tap | Voltage | Hex Size | Standard Package Quantity | NAED/UPC Number |
|---|---|---|---|---|---|---|---|
| IPC-1/0-2 | 4 | 1/0-8 AWG | 2-8 AWG | 300 (480 GROUNDED Y SYSTEM) | 1/2 | 12 | 0783669532661 |
| IPC-4/0-6 | 2 | 4/0-4 AWG | 6-14 AWG | 600 | 1/2 | 12 | 0783669532692 |
| IPC-4/0-2/0 | 1 | 4/0-2 AWG | 2/0-6 AWG | 600 | 1/2 | 8 | 0783669532715 |
| IPC-250-4/0 | 2 | 250 kcmil-1 AWG | 4/0-6 AWG | 600 | 5/8 | 4 | 0783669523737 |
| IPC-350-4/0 | 1 | 350 kcmil-4/0 AWG | 4/0-10 AWG | 300 (480 GROUNDED Y SYSTEM) | 5/8 | 4 | 0783669532746 |
| IPC-350-350 | 3 | 350 kcmil-4/0 AWG | 350 kcmil-4/0 AWG | 300 (480 GROUNDED Y SYSTEM) | 5/8 | 4 | 0783669532760 |
| IPC-500-12 | 1 | 500 kcmil-250 kcmil | 10-12 AWG | 300 (480 GROUNDED Y SYSTEM) | 5/8 | 4 | 0783669532777 |

ILSCO
4730 MADISON ROAD
CINCINNATI, OH 45227
513-533-6200
800-776-0175

TAP CUTSHEET (PG 1)

ILSCO

## KUP-L-TAP® (IPC) Insulation Piercing (Dual Rated)

| Item ID | Figure Number | Conductor Range Main | Conductor Range Tap | Voltage | Hex Size | Standard Package Quantity | NAED/UPC Number |
|---|---|---|---|---|---|---|---|
| IPC-500-250 | 1 | 500 kcmil-250 kcmil | 250 kcmil-4 AWG | 600 | 5/8 - 11/16 | 4 | 0783669532784 |
| IPC-500-500 | 1 | 500 kcmil-300 kcmil | 500 kcmil-250 kcmil | 600 | 7/8 - 7/8 | 1 | 0783669532807 |
| IPC-750-500 | 1 | 750 kcmil-500 kcmil | 500 kcmil-350 kcmil | 600 | 7/8 - 7/8 | 1 | 0783669532821 |

ILSCO
4730 MADISON ROAD
CINCINNATI, OH 45227
513-533-6200
800-776-0175

TAP CUTSHEET (PG 2)

## ILSCO Parallel Tap Connectors
### Dual Rated - Lay-In

RoHS Compliant · UL LISTED 453G · CSA

TYPE
**GTA**

**Features**
- Manufactured from high strength 6061-T6 aluminum alloy
- Electro-tin plated
- UL Listed and CSA Certified for 600 volts, 90° C
- Compact design
- Range taking
- Re-usable
- Lay-in main conductor
- Insulating cover available

**Benefits**
- Suitable for use with either copper or aluminum conductors
- Provides low contact resistance
- Ensures reliability for copper or aluminum conductors
- Saves space and reduces installation time
- Permits inventories to be kept to a minimum
- Provides efficient use and flexibility in the field
- No need to break the feeder cable
- Eliminates taping

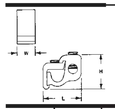


Fig. 1

Fig. 2

| Catalog Number | Figure Number | Wire Range Main | Wire Range Tap | Dimensions L | Dimensions W | Dimensions H | Hex Size Main | Hex Size Tap |
|---|---|---|---|---|---|---|---|---|
| GTA-2-2 | 1 | 2-12 str | 2-12 AL 2-14 CU | 1-1/4 | 9/16 | 1 | Slot | Slot |
| GTA-0-0 | 1 | 1/0-2 | 1/0-12 AL 1/0-14 CU | 1-8/16 | 3/4 | 1-1/8 | Slot | Slot |
| GTA-250-0 | 1 | 250kcmil-1/0 | 1/0-12 AL 1/0-14 CU | 2 | 15/16 | 1-7/16 | 5/16 | Slot |
| GTA-250-250 | 1 | 250kcmil-1/0 | 250kcmil-6 | 2-1/8 | 15/16 | 1-7/16 | 5/16 | 5/16 |
| GTA-350-350 | 1 | 350kcmil-4/0 | 350kcmil-6 | 2-7/16 | 1 | 1-11/16 | 3/8 | 3/8 |
| GTA-500-500 | 1 | 500kcmil-350kcmil | 500kcmil-2 | 2-15/16 | 1-1/4 | 2 | 3/8 | 3/8 |
| GTA-750-500 | 1 | 750kcmil-500kcmil | 500kcmil-2 | 3-3/8 | 1-5/16 | 2-7/16 | 3/8 | 3/8 |
| GTA-750-750 | 2 | 750kcmil-500kcmil | 750kcmil-1/0 | 3-3/8 | 2-5/8 | 2-7/16 | 1/2 | 1/2 |
| GTA-1000-500 | 1 | 1000kcmil-750kcmil | 500kcmil-2 | 3-3/8 | 1-15/16 | 2-7/16 | 1/2 | 3/8 |

Note: If ordering with cover, add suffix W/C to catalog number.

All wire sizes, unless noted otherwise, are American Wire Gauge (AWG)
Insulating covers are available for most connector sizes.
See page 99 for additional information on covers
DE-OX Inhibitor is recommended for all aluminum terminations.

Tested to UL 486A/B, UL File E6207



TAP CUTSHEET (PG 3)

## ILSCO "T" Tap Connectors - Dual Rated
### Lay-In

RoHS Compliant · UL LISTED 453G · CSA

TYPE
**GTT**

**Features**
- Manufactured from high strength 6061-T6 aluminum alloy
- Electro-tin plated
- UL Listed and CSA Certified for 600 volts, 90° C
- Compact design
- Range taking
- Re-usable
- Lay-in main conductor
- Insulating cover available

**Benefits**
- Suitable for use with either copper or aluminum conductors
- Provides low contact resistance
- Ensures reliability for copper or aluminum conductors
- Saves space and reduces installation time
- Permits inventories to be kept to a minimum
- Provides efficient use and flexibility in the field
- No need to break the feeder cable
- Eliminates taping

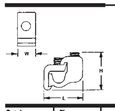


Fig. 1

Fig. 2

| Catalog Number | Figure Number | Wire Range Main | Wire Range Tap | Dimensions L | Dimensions W | Dimensions H | Hex Size Main | Hex Size Tap |
|---|---|---|---|---|---|---|---|---|
| GTT-2-2 | 1 | 2-12 str | 2-12 AL 2-14 CU | 1-1/4 | 9/16 | 1 | Slot | Slot |
| GTT-0-0 | 1 | 1/0-2 | 1/0-12 AL 1/0-14 CU | 1-8/16 | 3/4 | 1-1/8 | Slot | Slot |
| GTT-250-0 | 1 | 250kcmil-1/0 | 1/0-12 AL 1/0-14 CU | 2 | 7/8 | 1-7/16 | 5/16 | Slot |
| GTT-250-250 | 1 | 250kcmil-1/0 | 250kcmil-6 | 2-1/8 | 7/8 | 1-7/16 | 5/16 | 5/16 |
| GTT-350-350 | 1 | 350kcmil-4/0 | 350kcmil-6 | 2-7/16 | 1 | 1-11/16 | 3/8 | 3/8 |
| GTT-500-500 | 1 | 500kcmil-350kcmil | 500kcmil-2 | 2-15/16 | 1-1/4 | 2 | 3/8 | 3/8 |
| GTT-750-500 | 1 | 750kcmil-500kcmil | 500kcmil-2 | 3-3/8 | 1-1/4 | 2-7/16 | 3/8 | 3/8 |
| GTT-750-750 | 2 | 750kcmil-500kcmil | 750kcmil-600kcmil | 3-3/8 | 2-3/8 | 2-7/16 | 1/2 | EH 3/4 |

Note: If ordering with cover, add suffix W/C to catalog number.

All wire sizes, unless noted otherwise, are American Wire Gauge (AWG)
EH-External Hex
Insulating covers are available for most connector sizes.
See page 99 for additional information on covers
DE-OX Inhibitor is recommended for all aluminum terminations.

Tested to UL 486A/B, UL File E6207



TAP CUTSHEET (PG 4)

## ILSCO Insulating Covers For GTA-GTT

RoHS Compliant · UL LISTED 453G · CSA

TYPE
**GTC**

**Features**
- Snap closure
- Color coded
- UL Listed and CSA Certified for 600 volts, 90° C except for GTPC-750-750 and GTTC-750-750

**Benefits**
- Installs quickly and saves labor time by eliminating taping
- Provides ease of identification in the field
- Ensures reliability

Fig. 1

Fig. 2

Fig. 3

| Catalog Number | Figure Number | Color | Dimensions L | Dimensions W | Dimensions H | Used with Connector | |
|---|---|---|---|---|---|---|---|
| GTC-2 | 1 | Black | 2-1/4 | 1-13/16 | 1-1/4 | GTA-2-2: | GTT-2-2 |
| GTC-0 | 1 | Black | 2-1/2 | 2-3/32 | 1-3/8 | GTA-0-0: | GTT-0-0 |
| GTC-250-350 | 1 | Black | 3-61/64 | 3-1/32 | 2 | GTA-250-0:<br>GTT-250-0: | GTA-250-250<br>GTA-350-350<br>GTT-250-250<br>GTT-350-350 |
| GTC-500 | 1 | Black | 4-1/8 | 3-1/16 | 2-31/32 | GTA-500-500<br>GTT-500-500 | |
| GTC-750-500 | 1 | Black | 4-7/8 | 3-1/8 | 2-23/32 | GTA-750-500<br>GTT-750-500 | |
| GTPC-750-750* | 2 | Black | 4-7/8 | 4 | 2-7/8 | GTA-750-750 | |
| GTTC-750-750* | 3 | Black | 5-3/4 | 4-1/4 | 3-1/16 | GTT-750-750 | |

All wire sizes, unless noted otherwise, are American Wire Gauge (AWG)
* Not UL Listed or CSA Certified

Tested to UL 486A/B, UL File E6207



TAP CUTSHEET (PG 5)

WARNING:
IT IS A VIOLATION OF THE NYS EDUCATION LAW ARTICLE 145 FOR ANY PERSON, UNLESS HE OR SHE IS ACTING UNDER THE DIRECTION OF A LICENSED PROFESSIONAL ENGINEER, TO ALTER THIS ITEM IN ANY WAY.

APPROVED FOR CONSTRUCTION
THE DISTRIBUTION AND USE OF THE NATIVE FORMAT CAD FILE OF THIS DRAWING IS UNCONTROLLED. THE USER SHALL VERIFY TRACEABILITY OF THIS DRAWING TO THE LATEST CONTROLLED VERSION.

STATE OF NEW YORK · BRIAN CAULEY ROGERS · 103183 · LICENSED PROFESSIONAL ENGINEER
Date Signed: 03/24/2022
License Expires: 06/30/2023

| NO | DATE | REVISIONS AND RECORD OF ISSUE | DRN | DES | CHK | PDE | APP |
|---|---|---|---|---|---|---|---|
| 1 | 24/MAR/22 | APPROVED FOR CONSTRUCTION | IJR | IJR | NST | BCR | BCR |
| 0 | 15/APR/21 | ISSUED FOR PERMITTING | WS | JKT | NST | BCR | BCR |

I HEREBY CERTIFY THAT THIS DOCUMENT WAS PREPARED BY ME OR UNDER MY DIRECT SUPERVISION AND THAT I AM A DULY REGISTERED PROFESSIONAL ENGINEER UNDER THE LAWS OF THE STATE OF NEW YORK.
SIGNED BRIAN C. ROGERS
DATE 15/APR/21 REG NO. 103183

BLACK & VEATCH
BLACK & VEATCH NEW YORK, LLP 11404 LAMAR AVE, OVERLAND PARK, KS 66211
CERTIFICATE OF AUTHORIZATION NO. 0018348 EXP: 12/2023

DESIGNER JKT · DRAWN WS · CHECKED NST · DATE 15/APR/21

J.P. MORGAN CHASE
TRANCHE 10 - NEW YORK

ELECTRICAL DATA CUTSHEETS

PROJECT NY-STNDRD-SR26 · DRAWING NUMBER · REV 1
CODE · AREA

ANSI D 34x22
02/14/2017 04:16 PM

## POLARIS™
### Pre-Insulated Connectors
Multi-Conductor Connector Either Side Wire Entry
IPLD Series

c UL us LISTED

POLARIS®

### FEATURES
- Wire entry ports on both sides of the connector allow for access from either side.
- Eliminates the need for cover and taping.
- Insulated with high-dielectric strength plastical.
- Molded for precise fit and supplied with removable access plugs over the hex screws.
- Supplied with removable plugs to close the entry port not being utilized.
- Abrasion and chemical resistant.
- UV resistant.
- Will not support combustion.

### SPECIFICATIONS
- UL Listed 486B Wire Connector (Dry location).
- **Temperature Rating/Voltage:** AL9CU.
  Cold temperature rated to -45 °C, rated 600V, 90 °C.
- **Wire Type:** Dual rated for use with copper and/or aluminum cables. Not for fine-stranded, flexible wire.
- **Torque Chart:** 34.

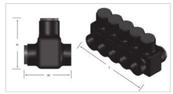

Figure varies by number of wire ports.

| CAT. NO. | NO. OF PORTS | WIRE RANGE | COPPER CONDUCTOR MAX. AMPS | ALUMINUM CONDUCTOR MAX. AMPS | LENGTH (L) (IN.) | WIDTH (W) (IN.) | HEIGHT (H) (IN.) | MAX. TORQUE VALUE (IN./LBS.) | HEX/WRENCH SIZE (IN.) | STD. CTN. QTY. |
|---|---|---|---|---|---|---|---|---|---|---|
| IPLD3/0-3 | 3 | 3/0-6 AWG | – | – | 2.630 | 1.830 | 1.790 | 250 | 1/4 | 6 |
| IPLD3/0-4 | 4 | 3/0-6 AWG | – | – | 3.410 | 1.830 | 1.790 | 250 | 1/4 | 6 |
| IPLD3/0-5 | 5 | 3/0-6 AWG | – | – | 4.190 | 1.830 | 1.790 | 250 | 1/4 | 4 |
| IPLD3/0-6 | 6 | 3/0-6 AWG | – | – | 4.970 | 1.830 | 1.790 | 250 | 1/4 | 4 |
| IPLD3/0-7 | 7 | 3/0-6 AWG | – | – | 5.750 | 1.830 | 1.790 | 250 | 1/4 | 3 |
| IPLD3/0-8 | 8 | 3/0-6 AWG | – | – | 6.530 | 1.830 | 1.790 | 250 | 1/4 | 3 |
| IPLD3/0-10 | 10 | 3/0-6 AWG | – | – | 8.090 | 1.830 | 1.790 | 250 | 1/4 | 2 |
| IPLD3/0-12 | 12 | 3/0-6 AWG | – | – | 9.70 | 1.830 | 1.790 | 250 | 1/4 | 2 |
| IPLD250-3 | 3 | 250 MCM-6 AWG | – | – | 2.930 | 2.280 | 2.180 | 360 | 5/16 | 6 |
| IPLD250-4* | 4 | 250 MCM-6 AWG | 527 A | 410 A | 3.800 | 2.280 | 2.180 | 360 | 5/16 | 6 |
| IPLD250-5 | 5 | 250 MCM-6 AWG | – | – | 4.660 | 2.280 | 2.180 | 360 | 5/16 | 4 |
| IPLD250-6* | 6 | 250 MCM-6 AWG | 790 A | 615 A | 5.520 | 2.280 | 2.180 | 360 | 5/16 | 4 |
| IPLD250-7 | 7 | 250 MCM-6 AWG | – | – | 6.380 | 2.280 | 2.180 | 360 | 5/16 | 3 |
| IPLD250-8* | 8 | 250 MCM-6 AWG | 1053 A | 820 A | 7.240 | 2.280 | 2.180 | 360 | 5/16 | 3 |
| IPLD250-10 | 10 | 250 MCM-6 AWG | – | – | 8.970 | 2.280 | 2.180 | 360 | 5/16 | 2 |
| IPLD250-12 | 12 | 250 MCM-6 AWG | – | – | 10.740 | 2.280 | 2.180 | 360 | 5/16 | 2 |
| IPLD350-3 | 3 | 350 MCM-6 AWG | – | – | 3.520 | 2.410 | 2.610 | 400 | 5/16 | 3 |
| IPLD350-4* | 4 | 350 MCM-6 AWG | 657 A | 514 A | 4.570 | 2.410 | 2.610 | 400 | 5/16 | 3 |
| IPLD350-5 | 5 | 350 MCM-6 AWG | – | – | 5.620 | 2.410 | 2.610 | 400 | 5/16 | 3 |
| IPLD350-6* | 6 | 350 MCM-6 AWG | 985 A | 770 A | 6.670 | 2.410 | 2.610 | 400 | 5/16 | 3 |
| IPLD350-7 | 7 | 350 MCM-6 AWG | – | – | 7.720 | 2.410 | 2.610 | 400 | 5/16 | 2 |
| IPLD350-8* | 8 | 350 MCM-6 AWG | 1314 A | 1028 A | 8.770 | 2.410 | 2.610 | 400 | 5/16 | 2 |
| IPLD350-9 | 9 | 350 MCM-6 AWG | – | – | 9.820 | 2.410 | 2.610 | 400 | 5/16 | 2 |
| IPLD350-10 | 10 | 350 MCM-6 AWG | – | – | 10.870 | 2.410 | 2.610 | 400 | 5/16 | 2 |
| IPLD350-12 | 12 | 350 MCM-6 AWG | – | – | 12.970 | 2.410 | 2.610 | 400 | 5/16 | 1 |

PARALLEL RATED

*An "Industry First" by providing a UL Listed 486A/B connector with code compliant and UL Listed maximum ampacity for Copper and Aluminum parallel conductors.

TAP CUTSHEET (PG 1)

## POLARIS™
### Pre-Insulated Connectors
Multi-Cable Blocks Either Side Wire Entry
IPLD Series Cnt'd

c UL us LISTED

### FEATURES
- Wire entry ports on both sides of the connector allow for access from either side.
- Eliminates the need for cover and taping.
- Insulated with high-dielectric strength plastical.
- Molded for precise fit and supplied with removable access plugs over the hex screws.
- Supplied with removable plugs to close the entry port not being utilized.
- Abrasion, chemical and UV resistant.
- Will not support combustion.

### SPECIFICATIONS
- UL Listed 486B Wire Connector (Dry location).
- **Temperature Rating/Voltage:** AL9CU.
  Cold temperature rated to -45 °C, rated 600V, 90 °C.
- **Wire Type:** Dual rated for use with copper and/or aluminum cables. Not for fine-stranded, flexible wire.
- **Torque Chart:** 34.

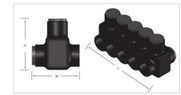

Figure varies by number of wire ports.

| CAT. NO. | CERTIFICATION | NO. OF PORTS | WIRE RANGE | COPPER CONDUCTOR MAX. AMPS | ALUMINUM CONDUCTOR MAX. AMPS | LENGTH (L) (IN.) | WIDTH (W) (IN.) | HEIGHT (H) (IN.) | MAX. TORQUE VALUE (IN./LBS.) | HEX/WRENCH SIZE (IN.) | STD. CTN. QTY. |
|---|---|---|---|---|---|---|---|---|---|---|---|
| IPLD500-3 | cULus | 3 | 500 MCM-4 AWG | – | – | 4.010 | 2.830 | 2.910 | 450 | 5/16 | 3 |
| IPLD500-4* | cULus | 4 | 500 MCM-4 AWG | 806A | 631 A | 5.240 | 2.830 | 2.910 | 450 | 5/16 | 3 |
| IPLD500-5 | cULus | 5 | 500 MCM-4 AWG | – | – | 6.380 | 2.830 | 2.910 | 450 | 5/16 | 2 |
| IPLD500-6* | cULus | 6 | 500 MCM-4 AWG | 1209 A | 946 A | 7.520 | 2.830 | 2.910 | 450 | 5/16 | 2 |
| IPLD500-7 | cULus | 7 | 500 MCM-4 AWG | – | – | 8.670 | 2.830 | 2.910 | 450 | 5/16 | 2 |
| IPLD500-8* | cULus | 8 | 500 MCM-4 AWG | 1612 A | 1262 A | 9.820 | 2.830 | 2.910 | 450 | 5/16 | 2 |
| IPLD500-9 | cULus | 9 | 500 MCM-4 AWG | – | – | 10.880 | 2.830 | 2.910 | 450 | 5/16 | 2 |
| IPLD500-10 | cULus | 10 | 500 MCM-4 AWG | – | – | 12.110 | 2.830 | 2.910 | 450 | 5/16 | 1 |
| IPLD500-12 | cULus | 12 | 500 MCM-4 AWG | – | – | 14.400 | 2.830 | 2.910 | 450 | 5/16 | 1 |
| IPLD600-3 | cULus | 3 | 600 MCM-6 AWG | – | – | 4.550 | 2.960 | 3.030 | 550 | 5/16 | 3 |
| IPLD600-4* | cULus | 4 | 600 MCM-6 AWG | 1035 A | 810 A | 5.850 | 2.960 | 3.030 | 550 | 5/16 | 3 |
| IPLD600-5 | cULus | 5 | 600 MCM-6 AWG | – | – | 7.150 | 2.960 | 3.030 | 550 | 5/16 | 2 |
| IPLD600-6* | cULus | 6 | 600 MCM-6 AWG | 1554 A | 1215 A | 8.450 | 2.960 | 3.030 | 550 | 5/16 | 2 |
| IPLD600-7 | cULus | 7 | 600 MCM-6 AWG | – | – | 9.750 | 2.960 | 3.030 | 550 | 5/16 | 2 |
| IPLD600-8* | cULus | 8 | 600 MCM-6 AWG | 2070 A | 1620 A | 11.050 | 2.960 | 3.030 | 550 | 5/16 | 2 |
| IPLD600-9 | cULus | 9 | 600 MCM-6 AWG | – | – | 12.390 | 2.960 | 3.030 | 550 | 5/16 | 1 |
| IPLD600-10 | cULus | 10 | 600 MCM-6 AWG | – | – | 13.650 | 2.960 | 3.030 | 550 | 5/16 | 1 |
| IPLD600-12 | cULus | 12 | 600 MCM-6 AWG | – | – | 16.250 | 2.960 | 3.030 | 550 | 5/16 | 1 |
| IPLD750-3 | – | 3 | 750-250 MCM | – | – | 4.950 | 3.410 | 3.420 | 550 | 3/8 | 3 |
| IPLD750-4 | – | 4 | 750-250 MCM | – | – | 6.380 | 3.410 | 3.420 | 550 | 3/8 | 2 |
| IPLD750-5 | – | 5 | 750-250 MCM | – | – | 7.800 | 3.410 | 3.420 | 550 | 3/8 | 1 |
| IPLD750-6 | – | 6 | 750-250 MCM | – | – | 9.230 | 3.410 | 3.420 | 550 | 3/8 | 1 |
| IPLD750-7 | – | 7 | 750-250 MCM | – | – | 10.650 | 3.410 | 3.420 | 550 | 3/8 | 1 |
| IPLD750-8 | – | 8 | 750-250 MCM | – | – | 12.080 | 3.410 | 3.420 | 550 | 3/8 | 1 |
| IPLD750-9 | – | 9 | 750-250 MCM | – | – | 13.690 | 3.410 | 3.420 | 550 | 3/8 | 1 |
| IPLD750-10 | – | 10 | 750-250 MCM | – | – | 14.930 | 3.410 | 3.420 | 550 | 3/8 | 1 |
| IPLD750-12 | – | 12 | 750-250 MCM | – | – | 17.780 | 3.410 | 3.420 | 550 | 3/8 | 1 |

PARALLEL RATED

*An "Industry First" by providing a UL Listed 486A/B connector with code compliant and UL Listed maximum ampacity for Copper and Aluminum parallel conductors.

TAP CUTSHEET (PG 2)

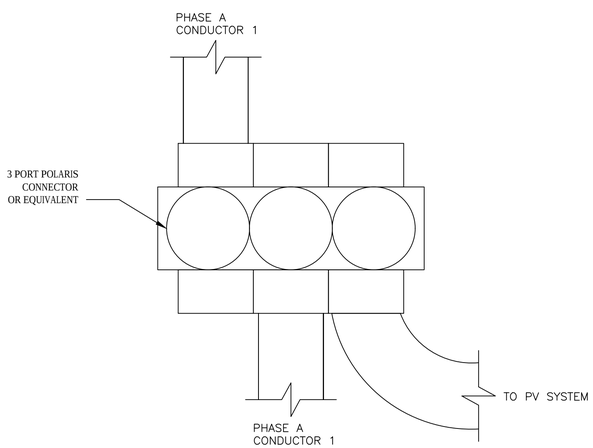


PV INTERCONNECTION TO SERVICE/FEEDER CONDUCTOR
EXAMPLE ON PHASE A (TYPICAL FOR ALL)

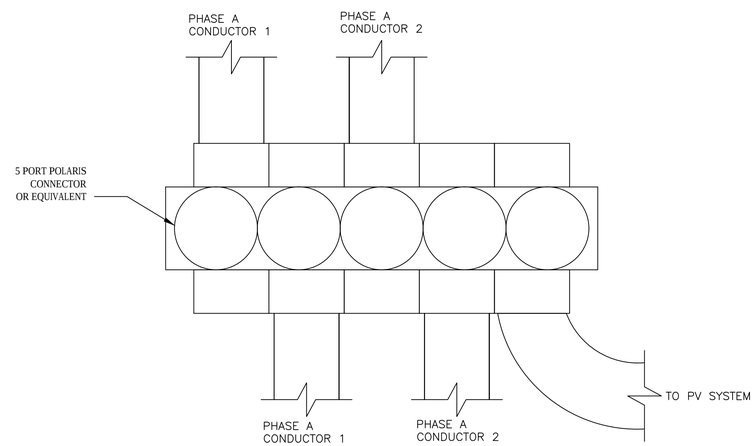


PV INTERCONNECTION TO PARALLEL SERVICE/FEEDER CONDUCTOR
EXAMPLE ON PHASE A (TYPICAL FOR ALL)
NOTE 1

WARNING:
IT IS A VIOLATION OF THE NYS EDUCATION LAW ARTICLE 145 FOR ANY PERSON, UNLESS HE OR SHE IS ACTING UNDER THE DIRECTION OF A LICENSED PROFESSIONAL ENGINEER, TO ALTER THIS ITEM IN ANY WAY.

NOTES:
1. PARALLELED CONDUCTORS MUST HAVE THE SAME ELECTRICAL CHARACTERISTICS AND BE INSTALLED IN THE SAME MANNER PER NEC 310.10(G). THE PV INTERCONNECTION TO THE PARALLELED SET OF EXISTING SERVICE/FEEDER CONDUCTORS MUST BE MADE TO ALL THE CONDUCTORS IN THE SET.
2. SUBCONTRACTOR SHALL USE TORQUE WRENCH TO APPLY MANUFACTURER SPECIFIED TORQUE TO CONNECTOR PRESSURE SCREWS.
3. EACH PORT IN THE CONNECTOR SHALL CONTAIN ONLY ONE CONDUCTOR.

APPROVED FOR CONSTRUCTION
THE DISTRIBUTION AND USE OF THE NATIVE FORMAT CAD FILE OF THIS DRAWING IS UNCONTROLLED. THE USER SHALL VERIFY TRACEABILITY OF THIS DRAWING TO THE LATEST CONTROLLED VERSION.

STATE OF NEW YORK · BRIAN CAULEY ROGERS · 103183 · LICENSED PROFESSIONAL ENGINEER
Date Signed: 03/24/2022
License Expires: 06/30/2023

| NO | DATE | REVISIONS AND RECORD OF ISSUE | DRN | DES | CHK | PDE | APP |
|---|---|---|---|---|---|---|---|
| 1 | 24/MAR/22 | APPROVED FOR CONSTRUCTION | IJR | IJR | NST | BCR | BCR |
| 1 | 15/MAR/22 | ISSUED FOR PERMITTING | WS | JKT | NST | BCR | BCR |
| 0 | 15/APR/21 | ISSUED FOR PERMITTING | WS | JKT | NST | BCR | BCR |

I HEREBY CERTIFY THAT THIS DOCUMENT WAS PREPARED BY ME OR UNDER MY DIRECT SUPERVISION AND THAT I AM A DULY REGISTERED PROFESSIONAL ENGINEER UNDER THE LAWS OF THE STATE OF NEW YORK.
SIGNED BRIAN C. ROGERS
DATE 15/APR/21 REG NO. 103183

BLACK & VEATCH
BLACK & VEATCH NEW YORK, LLP 11404 LAMAR AVE, OVERLAND PARK, KS 66211
CERTIFICATE OF AUTHORIZATION NO. 0018348 EXP: 12/2023

DESIGNER JKT | DRAWN WS | CHECKED NST | DATE 15/APR/21

J.P. MORGAN CHASE
TRANCHE 10 - NEW YORK

ELECTRICAL DATA CUTSHEETS

PROJECT | DRAWING NUMBER NY-STNDRD-SR26 | REV 1
CODE
AREA

ANSI D 34x22
02/14/2017 04:16 PM

# CrossRail and Shared Rail Systems

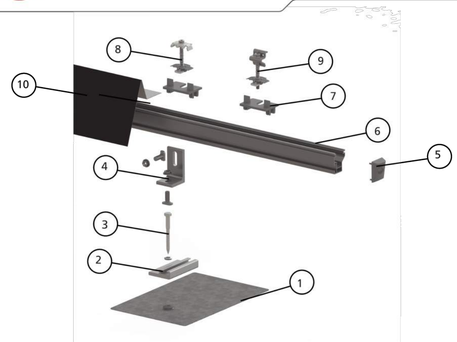


| Item No. | Description | Product No. |
|---|---|---|
| 1 | EverFlash eComp Kit, 8x12" | 4000366, 4000367 |
| 2 | Slide Bracket (Shared Rail Only) | 4000591 |
| 3 | 5/16 inch Lag Bolt and EPDM Washer | 4000359 |
| 4 | L-Foot with Hardware | 4000630, 4000631 |
| 5 | CrossRail End Cap (48-X, 48-XL shown), 80 | 4000433, 4001221 |
| 6 | CrossRail (48-X shown), 48-XL, 80 | multiple |
| 7 | AddOn, Slide In (Shared Rail Only) | 4000632 |
| 8 | CrossRail Mid Clamp Set | multiple |
| 9 | CrossRail End Clamp Set | 4000429, 4000430 |
| 10 | Array Skirt (Shared Rail Only) | 4000493 |



# EverFlash eComp + SR Slide Kit

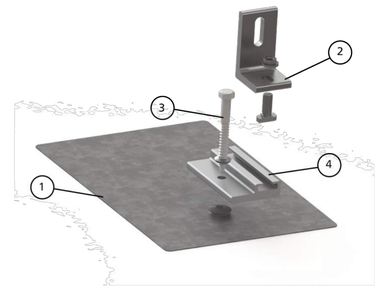


| Item No. | Description | Product No. |
|---|---|---|
| 1 | EverFlash eComp Kit | 4000366, 4000367 |
| 2 | L-Foot and Hardware | 4000630, 4000631 |
| 3 | 5/16" Lag Bolt | 4000359 |
| 4 | Short Slider (EverFlash eComp + SR Slide Kit) | 4000591 |

## Technical data

| | EverFlash eComp + SR Slide Kit |
|---|---|
| **Roof Type** | Composition Shingle |
| **Material** | Aluminum and stainless steel for high corrosion resistance |
| **Finish** | Mill |
| **Roof Connection** | 5/16" lag bolt |
| **Code Compliance** | UL 2703 |
| **Compatability** | CrossRail 48-X, 48-XL, 80 |
| **Warranty** | 25 years |

Product Warranty 25 years Item #



# Micro-Inverter and Optimizer Mounting Kit

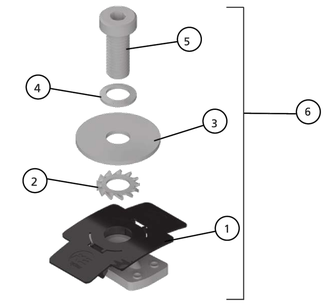


| Item No. | Description | Product No. |
|---|---|---|
| 1 | MK3 Slot Nut,w/Clip, SS | 4002042 |
| 2 | Lock Washer, Serrated for SolarEdge Kit | 4000626 |
| 3 | Flat Washer 8, 4x30x1.5mm, SS | 4000273 |
| 4 | Lock Washer S8, 13x8.4x8mm, SS | 4000120 |
| 5 | Allen Bolt M8x20, SW6 Cap Head Screw | 4000190 |
| 6 | CR Micro, Optimizer & Accs. Mounting Kit | 4000629 |



# S-5!® The Right Way!

**The strength of the S-5-U clamp is in its simple design. The patented setscrews will slightly dimple the metal seam material but not pierce it—leaving the roof manufacturer's warranty intact.**

The **S-5-U and S-5-U Mini clamps** are each furnished with the hardware shown to the right. Each box also includes a bit tip for tightening setscrews using an electric screw gun. A structural aluminum attachment clamp, the S-5-U is compatible with most common metal roofing materials excluding copper. All included hardware is stainless steel. Please visit **www.S-5.com** for more information including CAD details, metallurgical compatibilities and specifications.

The S-5-U clamp has been tested for load-to-failure results on most major brands and profiles of standing seam roofing. The independent lab test data found at www.S-5.com can be used for load-critical designs and applications. S-5!® holding strength is unmatched in the industry.

## Example Profiles

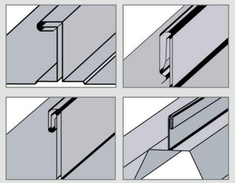

For horizontal seams under 0.65", do not use this clamp. Visit www.S-5.com for more detailed information and proper clamp usage.

## S-5-U Clamp

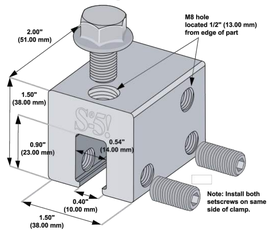


## S-5-U Mini Clamp

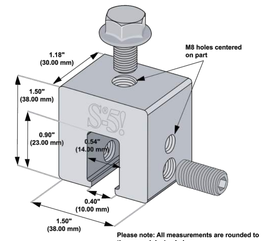


Please note: All measurements are rounded to the second decimal place.

**S-5!® Warning! Please use this product responsibly!**

**Products are protected by multiple U.S. and foreign patents. Visit the website at www.S-5.com for complete information on patents and trademarks. For maximum holding strength, setscrews should be tensioned and re-tensioned as the seam material compresses. Clamp setscrew tension should be verified using a calibrated torque wrench between 160 and 180 inch pounds when used on 22ga steel, and between 130 and 150 inch pounds for all other metals and thinner gauges of steel. Consult the S-5! website at www.S-5.com for published data regarding holding strength.**



Distributed by



NOT USED



# DURA-BLOK™ Rooftop Solutions Support

DURA-BLOK™ Supports are made of 100% recycled rubber and are designed to provide an economical way to support pipes, HVAC systems, rooftop walkway systems, ducting, conduit, cable tray, and more.

## Features & Benefits

- Made from 100% recycled rubber
- Qualifies for LEED credits
- Reflective strip on both sides allow for easy product visibility
- Channel is through bolted on all sizes for added strength
- 1" gap between blocks allows water to flow freely around longer assemblies
- No roof penetration required
- Product composition is not sharp or abrasive helping to extend the roof life
- Dampens vibration
- No need for supplemental rubber pad
- Will not float or blow away
- UV resistant
- Suitable for any type roofing material or other flat surface
- For sloped roofs see adjustable hinge fitting (B634) on page 11
- Open ends allows for easier adjustments to DBE, DBR, and DBM series
- Drainage channel through center of block

## *Base Only*

DURA-BLOK channel support is designed as an economical support for piping systems, cable tray, HVAC equipment and many other applications.

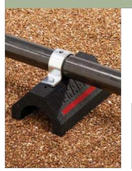

**Specifications:**

**Dimensions -** 4" (101mm) High x 6" (152mm) Wide x 9.6" (244mm) Long (base length)

**Material -** 100% recycled rubber, UV resistant

**Ultimate Load Capacity -** (uniform load) *

DBP - 500 lbs. (2.22kN) DBM - 200 lbs. (0.89kN)


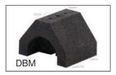


| UPC/Part No. | B-Line Cat. No. | Height | Width | Length | Weight Each |
|---|---|---|---|---|---|
| 782051 49691 | DBP | 4" (101mm) | 6" (152mm) | 9.6" (244mm) | 4.48 (2.03kg) |
| 782051 50005 | DBM | 4" (101mm) | 6" (152mm) | 4.8" (122mm) | 2.35 (1.07kg) |

* For Roof Loading, Consult Roofing Manufacturer or Engineer. As with most commercial roofs, the weakest point may be the insulation board beneath the rubber membrane.



# Classic Comp Conduit Mount | QMCC

Elevated Water Seal Technology®

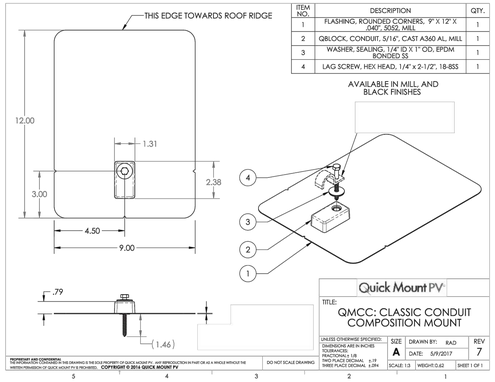


| ITEM NO. | DESCRIPTION | QTY. |
|---|---|---|
| 1 | FLASHING, ROUNDED CORNERS, 9" X 12" X .047, 3052, MILL | 1 |
| 2 | QBLOCK, CONDUIT, 5/16", CAST A360 AL, MILL | 1 |
| 3 | WASHER, SEALING, 1/4" ID X 1" OD, EPDM BONDED SS | 1 |
| 4 | LAG SCREW, HEX HEAD, 1/4" x 2-1/2", 18-8SS | 1 |

| Lag pull-out (withdrawal) design values (lbs) in typical sheathing: | | | |
|---|---|---|---|
| | Lag Bolt Specifications | | |
| | Specific Gravity | 1/4" shaft per 1/2" thread depth | 1/4" shaft per 1" thread depth |
| Plywood | .45 | 72 | 144 |
| OSB | .45 | 72 | 144 |

**Sources:** APA - The Engineered Wood Association, TT-051C, 2011

**Note:** Lag pull-out (withdrawal) ultimate capacity = 350 lbs. in 1/2" plywood or 1/2" OSB.

**IMPORTANT:** To maintain waterproofing it is important that the aluminum flashing (item 1) is properly placed under one full course above the mounting block with at least some of the flashing extending up under the course above that as well. See instructions on back.

Quick Mount PV® RESPECT THE ROOF

BI 7.2.3-8

May-2017, Rev 10



WARNING:
IT IS A VIOLATION OF THE NYS EDUCATION LAW ARTICLE 145 FOR ANY PERSON, UNLESS HE OR SHE IS ACTING UNDER THE DIRECTION OF A LICENSED PROFESSIONAL ENGINEER, TO ALTER THIS ITEM IN ANY WAY.

APPROVED FOR CONSTRUCTION

THE DISTRIBUTION AND USE OF THE NATIVE FORMAT CAD FILE OF THIS DRAWING IS UNCONTROLLED. THE USER SHALL VERIFY TRACEABILITY OF THIS DRAWING TO THE LATEST CONTROLLED VERSION.

STATE OF NEW YORK · NATHANIEL ELLIS BOLDS, JR. · 102997 · LICENSED PROFESSIONAL ENGINEER

Date Signed: 03/24/2022
License Expires: 04/30/2023

| NO | DATE | REVISIONS AND RECORD OF ISSUE | DRN | DES | CHK | PDE | APP |
|---|---|---|---|---|---|---|---|
| 1 | 24/MAR/22 | APPROVED FOR CONSTRUCTION | IJR | IJR | SAS | NEB | NEB |
| 0 | 15/APR/21 | ISSUED FOR PERMITTING | WS | NEB | SAS | NEB | NEB |

I HEREBY CERTIFY THAT THIS DOCUMENT WAS PREPARED BY ME OR UNDER MY DIRECT SUPERVISION AND THAT I AM A DULY REGISTERED PROFESSIONAL ENGINEER UNDER THE LAWS OF THE STATE OF NEW YORK

SIGNED NATHANIEL ELLIS BOLDS, JR.

DATE 15/APR/21 REG NO. 102997

BLACK & VEATCH

BLACK & VEATCH NEW YORK, LLP
11404 LAMAR AVE., OVERLAND PARK, KS 66211
CERTIFICATE OF AUTHORIZATION NO. 0018348 EXP: 12/2023

DESIGNER NEB | DRAWN WS | CHECKED SAS | DATE 15/APR/21

PROJECT: J.P. MORGAN CHASE TRANCHE 10 - NEW YORK

STRUCTURAL COMPONENT CUTSHEETS

DRAWING NUMBER: NY-STNDRD-SR30

REV 1

CODE

AREA

ANSI D 34x22
02/14/2017 04:16 PM

GENERAL NOTES:

1. ALL CONSTRUCTION FOR UNIRAC'S 'ROOF MOUNT' (RM) RACKING SYSTEM SHALL CONFORM TO THE CODES SHOWN IN THE RM DESIGN CRITERIA TABLE BELOW. LOCAL JURISDICTION AMENDMENTS TO THE CODE MUST BE TAKEN INTO CONSIDERATION.
2. WHENEVER THE TERM "CONTRACTOR" IS USED IN THE CONSTRUCTION DOCUMENT, IT SHALL BE DEFINED TO MEAN THE GENERAL CONTRACTOR AND ANY SUB-CONTRACTOR COLLECTIVELY AS APPLICABLE AND AS REQUIRED.
3. THE CONTRACT "STRUCTURAL RACKING" DRAWINGS REPRESENT THE FINISHED STRUCTURE. UNIRAC AND THE ENGINEER OF RECORD WILL NOT BE RESPONSIBLE FOR THE CONTRACTOR'S MEANS, METHODS, TECHNIQUES, SEQUENCES OR PROCEDURES OF CONSTRUCTION.
4. UNIRAC AND THE ENGINEER OF RECORD WILL NOT BE RESPONSIBLE FOR CONSTRUCTION SITE SAFETY OR SAFETY PRECAUTIONS AND PROGRAMS INCIDENT HERETO.
5. IT IS THE CONTRACTOR'S RESPONSIBILITY TO INSPECT AND ENSURE THAT ALL WORK IS IN CONFORMANCE WITH THE CONTRACT DOCUMENTS. ANY STRUCTURAL INSPECTION/OBSERVATION PROVIDED BY OTHERS (INCLUDING UNIRAC AND THE ENGINEER OF RECORD) DOES NOT RELIEVE THE CONTRACTOR OF THE RESPONSIBILITY. ANY DEVIATION FROM THE CONTRACT DOCUMENTS THAT IS ENCOUNTERED AT A LATER DATE AND IS DECLARED TO BE SIGNIFICANT BY UNIRAC AND THE ENGINEER OF RECORD SHALL BE CORRECTED BY THE CONTRACTOR (AT THE CONTRACTOR'S EXPENSE). ANY INDIVIDUALS FROM UNIRAC OR THE ENGINEER OF RECORD'S OFFICE PERFORMING SITE VISITS OR STRUCTURAL OBSERVATIONS ARE NOT AUTHORIZED TO DIRECT OR APPROVE ANY CHANGES FROM THE CONTRACT DOCUMENTS OR STOP AND/OR DELAY THE WORK.
6. CONTRACTOR SHALL VERIFY ALL DIMENSIONS AND COORDINATE SITE CONDITIONS WITH THE DRAWING PRIOR TO BIDDING AND THE START OF CONSTRUCTION. ANY CONFLICTS, DISCREPANCIES, OR OMISSIONS SHALL BE RESOLVED WITH UNIRAC AND THE ENGINEER OF RECORD PRIOR TO PROCEEDING. DO NOT SCALE DIMENSIONS FROM DRAWINGS. WRITTEN DIMENSIONS SHALL BE USED OR WHERE NO DIMENSION IS PROVIDED. CONSULT WITH UNIRAC FOR CLARIFICATION BEFORE PROCEEDING.
7. WHERE ANY DISCREPANCIES OCCUR BETWEEN PLANS, DETAILS, STRUCTURAL NOTES AND SPECIFICATIONS, THE GREATER (MOST CONSERVATIVE) REQUIREMENTS SHALL GOVERN. WHERE NO SPECIFIC DETAIL IS SHOWN, CONSTRUCTION SHALL CONFORM TO SIMILAR WORK ON THE PROJECT. IF THERE IS NO SIMILAR WORK CONSTRUCTION SHALL CONFORM TO INDUSTRY STANDARDS. CONTRACTOR MUST INFORM UNIRAC OF ANY DISCREPANCIES.
8. ANY EQUIPMENT OR CONDUIT BEING SUPPORTED BY OR SUSPENDED FROM THE RACKING STRUCTURE SHALL BE COORDINATED WITH UNIRAC AND THE ENGINEER OF RECORD FOR REVIEW AND APPROVAL PRIOR TO PURCHASE AND INSTALLATION OF EQUIPMENT OR CONDUIT.
9. ASTM SPECIFICATIONS ON THE DRAWINGS SHALL BE OF THE LATEST ASTM STANDARD SPECIFICATION OR ASTM STANDARD ADOPTED BY THE SITE JURISDICTION.
10. ANY ENGINEERING DESIGN PROVIDED BY OTHERS AND SUBMITTED FOR REVIEW SHALL BEAR THE SEAL OF A PROFESSIONAL CIVIL OR STRUCTURAL ENGINEER REGISTERED IN THE STATE OF THE LOCAL JURISDICTION.
11. THE FOLLOWING DESIGN CRITERIA IS EXCLUDED FROM DESIGN: FLOOD LOADING, DEBRIS LOADING , DYNAMIC ANALYSIS, ACTS OF GOD (TORNADO, HURRICANE, WATER INUNDATION LOADING, ETC.), AND DYNAMIC LOADING FROM SEISMIC EVENTS AND CONDITIONS.
12. THE MINIMUM DISTANCE BETWEEN ROOF EDGE AND MODULES OR RM RACKING SYSTEM MUST BE 4 FT UNLESS NOTED OTHERWISE IN THE UNIRAC ENGINEERING REPORT.
13. UNIRAC IS NOT RESPONSIBLE FOR THE ORIGINAL BUILDING STRUCTURE. CONSULT WITH A LICENSED PROFESSIONAL ENGINEER IN THE JURISDICTION OF THE PROJECT TO ENSURE THE EXISTING BUILDING IS CAPABLE OF HANDLING ADDITIONAL LOAD FROM THE RM STRUCTURE.
14. IN THE EVENT THAT THE ARRAY IS DISPLACED FOR ANY REASON, THE ARRAY SHALL BE REPOSITIONED INTO ITS ORIGINAL DESIGN LOCATION SO AS TO ENSURE THAT PROPER SEISMIC AND FIREFIGHTING ACCESS CLEARANCES AND SEPARATIONS ARE MAINTAINED, IN ADDITION TO ELECTRICAL WIRING SEISMIC SLACK REQUIREMENTS.
15. THESE GENERAL NOTES APPLY TO ALL SHEETS IN THIS PACKAGE.

SOLAR DESIGN:

UNIRAC IS NOT THE SOLAR DESIGN ENGINEER OF RECORD AND IS NOT RESPONSIBLE FOR ANY SOLAR DESIGN, OUTPUT EFFICIENCIES, SHADING, ETC. IT IS THE RESPONSIBILITY OF THE INSTALLING CONTRACTOR TO CONFIRM THAT THE LOCATION OF THE RACKING/MODULES DOES NOT INTERFERE WITH OR BECOME SHADED BY OBSTRUCTIONS.

ELECTRICAL DESIGN:

UNIRAC IS NOT THE ELECTRICAL ENGINEER OF RECORD AND IS NOT RESPONSIBLE FOR THE ELECTRICAL DESIGN FOR THIS PROJECT. THE UNIRAC SYSTEM IS CERTIFIED TO UL-2703 WHEN PROPERLY INSTALLED. SEE THE RM INSTALLATION GUIDE FOR MORE DETAIL.

MATERIAL MANAGEMENT:

1. PRIOR TO INSTALLATION , ALL MATERIALS MUST BE STORED PROPERLY. THIS MEANS MATERIALS REMAINING IN ONE PLACE FOR MORE THAN ONE WEEK MUST BE IN OPEN AIR CONDITIONS (I.E. UP AND ABOVE THE GROUND AND WATER TABLE). IF TARPS OR OTHER PROTECTIVE COVERS ARE USED, THEN ENDS SHALL BE LEFT OPEN FOR VENTILATION. TIGHT FITTING COVERINGS ARE NOT RECOMMENDED SINCE THEY CAN TRAP MOISTURE.
2. THE CONTRACTOR SHALL BE RESPONSIBLE FOR AND PROVIDE ALL MEASURES NECESSARY TO PROTECT THE RACKING SYSTEM FROM THE POINT OF UNIRAC DELIVERY THROUGHOUT THE COMPLETION OF CONSTRUCTION.

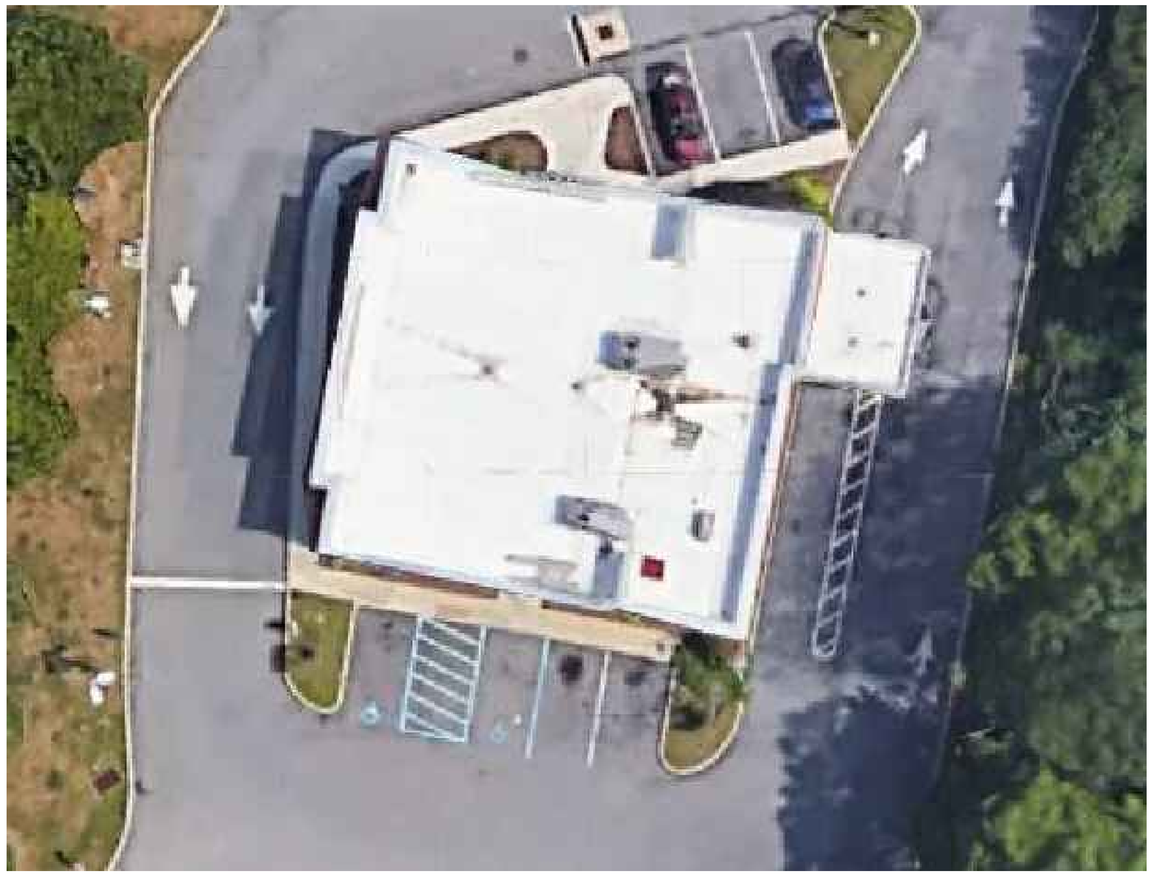

AERIAL PHOTO
NOT TO SCALE

RM STEEL COMPONENTS:

1. ALL STEEL RMDT BAYS ARE MANUFACTURED USING 16 GAGE ASTM A653 GRADE 50 STEEL GALVANIZED TO G235.
2. ALL MID CLAMPS AND END CLAMPS ARE MANUFACTURED USING 12 GAGE 300 SERIES 1/4 HARD STAINLESS STEEL WITH A MINIMUM TENSILE STRENGTH OF 125 KSI PER ASTM 666 WITH A MILL (2B) FINISH.
3. ALL WIRE MANAGEMENT CLIPS PROVIDED BY UNIRAC ARE MANUFACTURED USING 302 0.090Ø STAINLESS STEEL.

BALLAST BLOCK (CONCRETE MASONRY UNIT (CMU)):

1. INSTALLER IS RESPONSIBLE FOR PROCURING THE BALLAST BLOCKS (CMU) AND VERIFYING THE REQUIRED MINIMUM WEIGHT NEEDED FOR THIS DESIGN. CMU TO COMPLY WITH ASTM STANDARD SPECIFICATION FOR CONCRETE ROOF PAVERS DESIGNATION C1491 OR C90 WITH AN INTEGRAL WATER REPELLANT SUITABLE FOR THE CLIMATE IT IS PLACED. IT IS RECOMMENDED THAT THE BLOCKS ARE INSPECTED PERIODICALLY FOR ANY SIGNS OF DEGRADATION. IF DEGRADATION OF THE BLOCK IS OBSERVED, THE BLOCK SHOULD IMMEDIATELY BE REPLACED.
2. ACTUAL BLOCK DIMENSIONS ARE 3/8" LESS THAN NOMINAL DIMENSIONS.
3. THE CMU BALLAST BLOCK SHOULD HAVE NOMINAL DIMENSIONS OF 4"X8"X16".

HARDWARE:

1. ALL STEEL U-NUTS ARE MANUFACTURED USING 304 STAINLESS STEEL.
2. ALL 1/4 - 20 BOLTS ARE MANUFACTURED USING 18-8 STAINLESS STEEL.
3. ALL 1/4 INCH FENDER WASHERS ARE MANUFACTURED USING 18-8 STAINLESS STEEL.

| | | |
|---|---|---|
| TORQUE REQUIREMENTS | | |
| 1/4"Ø STAINLESS STEEL HARDWARE FOR CLAMPS | | 7-9 FT-LBS |
| 1/4"Ø STAINLESS STEEL HARDWARE FOR DEFLECTORS | | 10-15 FT-LBS |
| SINGLE USE ONLY-DO NOT RE-TORQUE ONCE FULLY SEATED | | |
| PROJECT OVERVIEW | | |
| PROJECT SIZE | | 17.71 KW |
| MODULE QUANTITY | | 46 |
| DESIGN CRITERIA | | |
| BUILDING CODE | | ASCE 7-16 |
| OCCUPANCY/RISK CATEGORY | | II |
| WIND SPEED | | 115 MPH |
| WIND EXPOSURE | | B |
| GROUND SNOWLOAD | | 30 PSF |
| SEISMIC SS | | 0.217 |
| SEISMIC S1 | | 0.056 |
| ROOF HEIGHT | | 20 FT |
| BUILDING LENGTH | | 60 FT |
| PARAPET HEIGHT | | > 1 Array Height |
| ROOF MEMBRANE TYPE | | OTHER |
| SITE ELEVATION ABOVE MSL | | 164 FT |
| MODULE SPECIFICATIONS | | |
| MANUFACTURER | | MISSION |
| MODEL | | MSE385SR9S |
| LENGTH | | 78.7 |
| WIDTH | | 39.68 |
| WEIGHT | | 52 |
| OUTPUT | | 385 WATT |
| ENGINEERING OUTPUT | | |
| PRODUCT LINE | | RMDT |
| TILT ANGLE | | 8 DEG |
| AVERAGE WEIGHT TO ROOF | | 6.99 PSF |
| TOTAL AREA | | 1149 SQ FT |
| TOTAL WEIGHT ON ROOF | | 8031 LB |
| TOTAL WEIGHT OF RACKING | | 487 LB |
| TOTAL WEIGHT OF MODULES | | 2392 LB |
| TOTAL WEIGHT OF BALLAST | | 5152 LB |
| ARRAY PARTS LIST | | |
| PART NUMBER | DESCRIPTION | QUANTITY |
| 310820 | RM END CLAMP 32-40 MM | 120 |
| 310802 | RMDT VALLEY BAY | 40 |
| 310825 | RMDT MID CLAMP 36-40 MM | 60 |
| 310801 | RMDT RIDGE BAY | 30 |
| USER SUPPLIED | 33 LB CMU BALLAST BLOCK | 161 |
| 310860 | KIT 1/4-20 CLIP ON NUT SS 18-8 | 180 |
| 008002S | GROUND WEEBLUG #1 | 2 |
| *M60700 | SANTOPRENE TPV, 64D, ACRYLIC PSA | 140* |
| SHEET INDEX | | |
| RMDT.100 | COVER SHEET | |
| RMDT.200 | KEY PLAN | |
| RMDT.301 | ARRAY LAYOUT ARRAY A1 | |
| RMDT.400 | RMDT DETAILS | |
| RMDT.401 | RMDT DETAILS | |
| RMDT.402 | RMDT SANTOPRENE DETAILS | |
| RMDT.500 | RMDT CERTIFICATIONS | |

NOTE: *SANTOPRENE PAD ONLY REQUIRED ON ROOFS WITH PVC MEMBRANE. FIELD VERIFY PVC ROOF MEMBRANE PRIOR TO PURCHASING PART NUMBER M60700.


UNIRAC®
1411 BROADWAY BOULEVARD NE
ALBUQUERQUE, NEW MEXICO, USA, 87102
WWW.UNIRAC.COM


ENGINEER'S STAMP

REVISIONS

| REV | DATE | DESCRIPTION | DRW | CHK |
|---|---|---|---|---|
| 0 | 08/03/2020 | Approved for construction | IS | NT |

FOR

BLACK&VEATCH

PROJECT

NY-150111
J.P.MORGAN CHASE

1460 Route 9
Wappingers Falls, NY 12590

TITLE

COVER SHEET

SHEET

RMDT.100

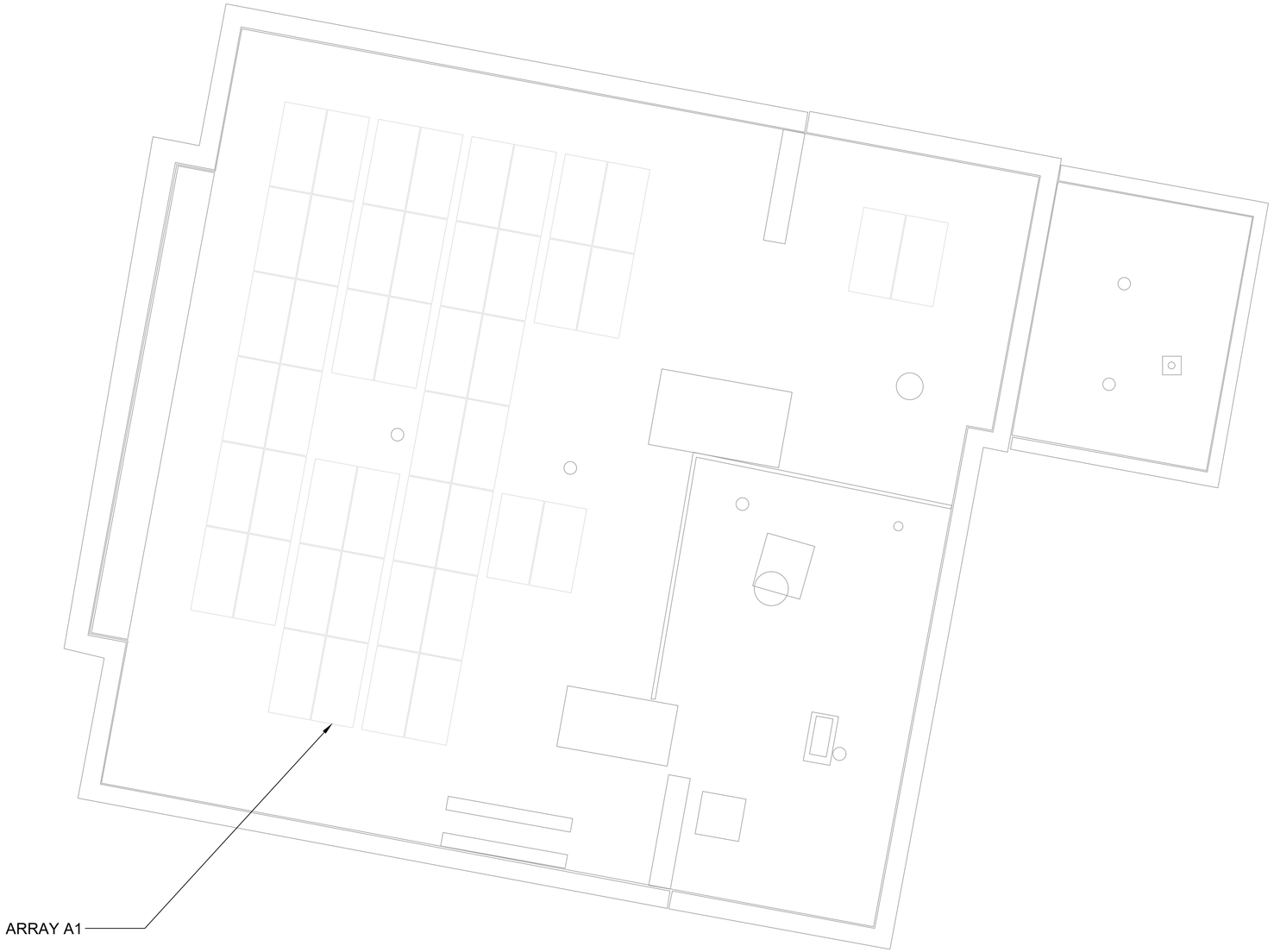


KEY PLAN
NOT TO SCALE

N

UNIRAC
1411 BROADWAY BOULEVARD NE
ALBUQUERQUE, NEW MEXICO, USA, 87102
WWW.UNIRAC.COM

ENGINEER'S STAMP

REVISIONS

| REV | DATE | DESCRIPTION | DRW | CHK |
|---|---|---|---|---|
| 0 | 09/23/2020 | Approved for construction | IS | WT |

FOR

BLACK&VEATCH

PROJECT

NY-150111
J.P.MORGAN CHASE

1460 Route 9
Wappingers Falls, NY 12590

TITLE

KEY PLAN

SHEET

RMDT.200

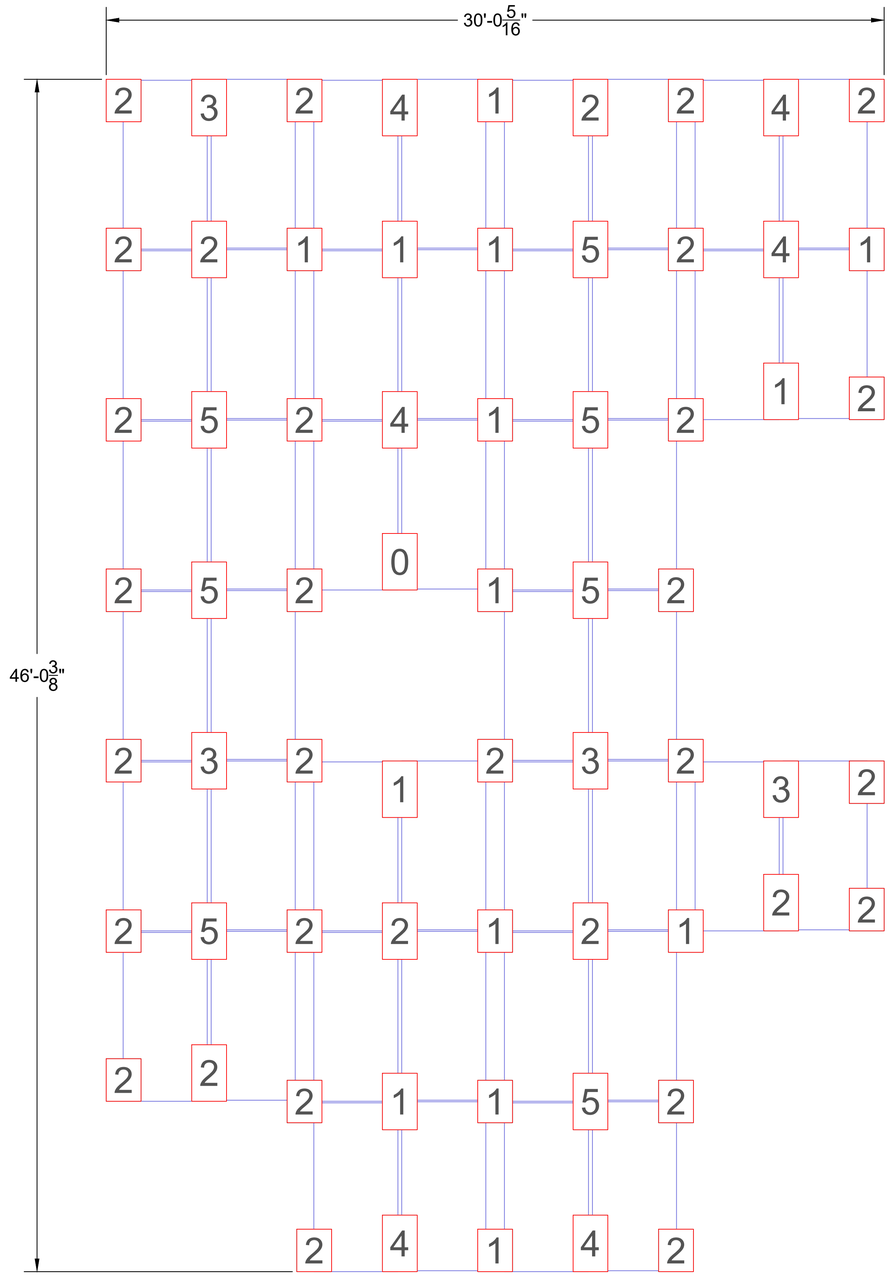


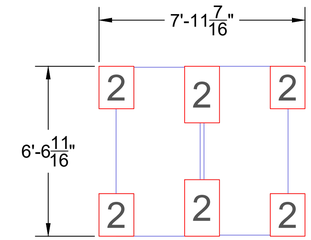


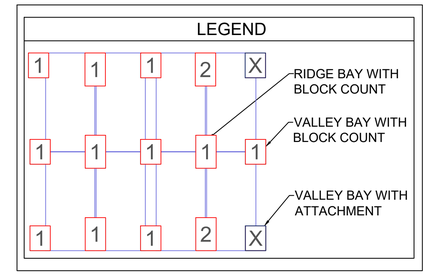


ARRAY A1 LAYOUT

NOT TO SCALE

UNIRAC
1411 BROADWAY BOULEVARD NE
ALBUQUERQUE, NEW MEXICO, USA, 87102
WWW.UNIRAC.COM

ENGINEER'S STAMP

**REVISIONS**

| REV | DATE | DESCRIPTION | DRW | CHK |
|---|---|---|---|---|
| 0 | 09/23/2020 | Approved for construction | IS | WT |

FOR

BLACK&VEATCH

PROJECT

NY-150111

J.P.MORGAN CHASE

1460 Route 9
Wappingers Falls, NY 12590

TITLE

ARRAY LAYOUT
ARRAY A1

SHEET

RMDT.301

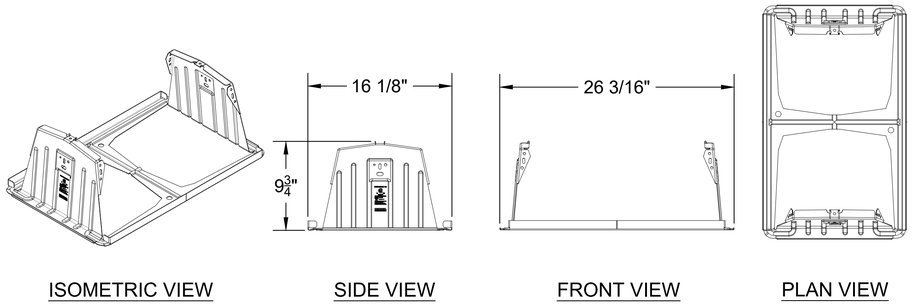


## 1 - RMDT BAY - RIDGE DETAIL

SCALE: NTS

NOTE: PER OWNER REQUIREMENT, INSTALLER MUST PROVIDE SLIP-SHEET BELOW EACH BALLAST BAY. SHIP SHEET DIMENSIONS MUST EXTEND 4" MINIMUM BEYOND BAY EDGES.

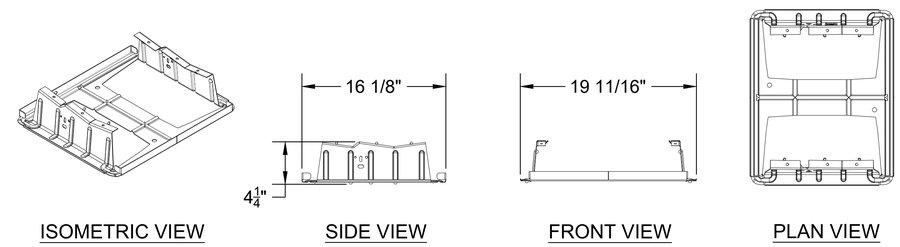


## 2 - RMDT BAY - VALLEY DETAIL

SCALE: NTS

NOTE: PER OWNER REQUIREMENT, INSTALLER MUST PROVIDE SLIP-SHEET BELOW EACH BALLAST BAY. SHIP SHEET DIMENSIONS MUST EXTEND 4" MINIMUM BEYOND BAY EDGES.

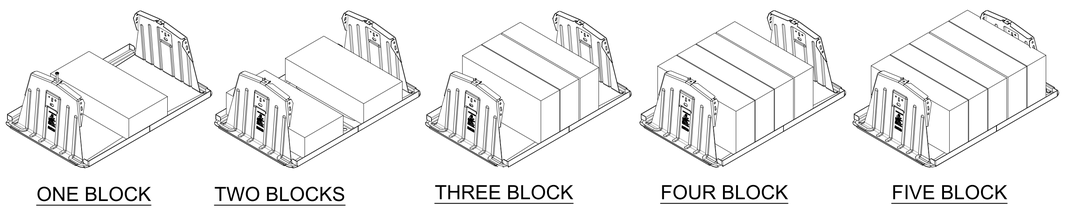


## 3 - RIDGE BALLAST BLOCK - CONFIGURATIONS

SCALE: NTS

NOTE: PER OWNER REQUIREMENT, INSTALLER MUST PROVIDE SLIP-SHEET BELOW EACH BALLAST BAY. SHIP SHEET DIMENSIONS MUST EXTEND 4" MINIMUM BEYOND BAY EDGES.

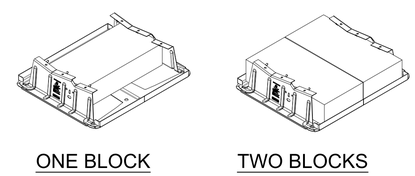


## 4 - VALLEY BALLAST BLOCK - CONFIGURATIONS

SCALE: NTS

NOTE: PER OWNER REQUIREMENT, INSTALLER MUST PROVIDE SLIP-SHEET BELOW EACH BALLAST BAY. SHIP SHEET DIMENSIONS MUST EXTEND 4" MINIMUM BEYOND BAY EDGES.

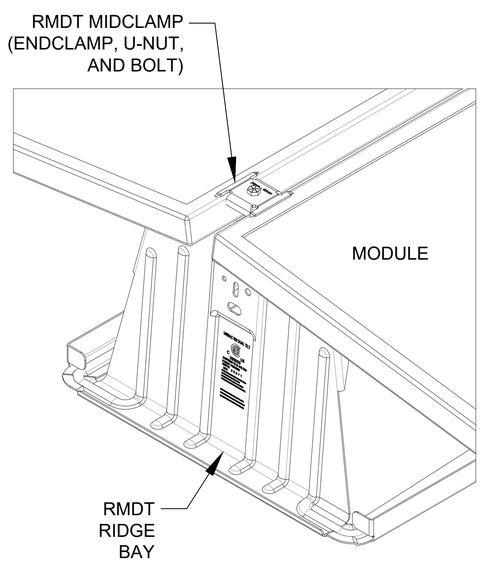


## 5 - RIDGE MIDCLAMP

SCALE: NTS

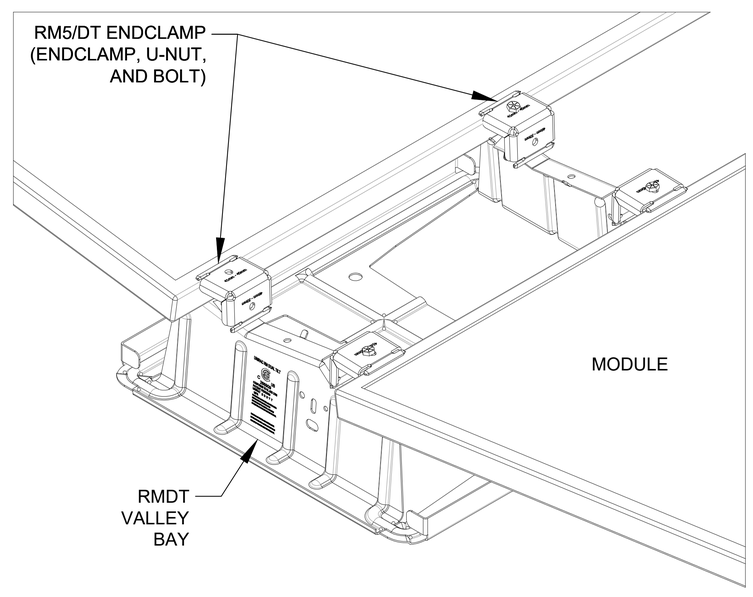


## 6 - VALLEY ENDCLAMP

SCALE: NTS

UNIRAC
1411 BROADWAY BOULEVARD NE
ALBUQUERQUE, NEW MEXICO, USA, 87102
WWW.UNIRAC.COM

ENGINEER'S STAMP

REVISIONS

| REV | DATE | DESCRIPTION | DRW | CHK |
|---|---|---|---|---|
| 0 | 09/23/2020 | Approved for construction | IS | NT |

FOR

BLACK&VEATCH

PROJECT

NY-150111
J.P.MORGAN CHASE

1460 Route 9
Wappingers Falls, NY 12590

TITLE

RMDT DETAILS

SHEET

RMDT.400

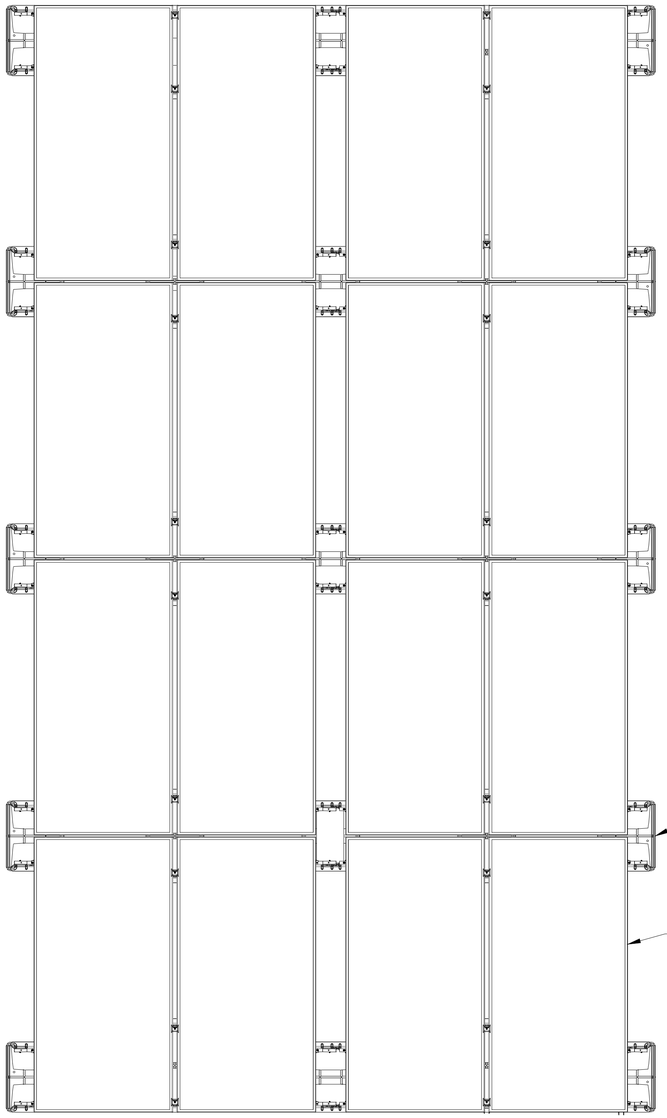


ARRAY - PLAN VIEW

NOT TO SCALE

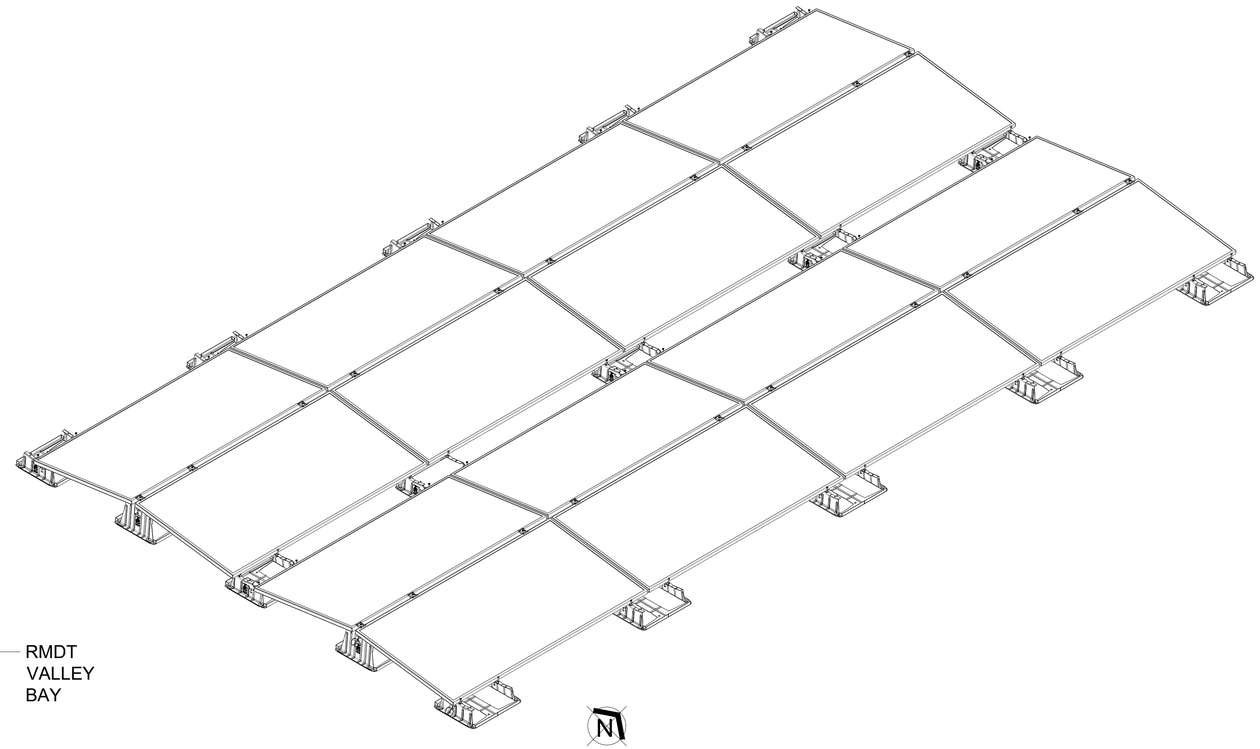

ISOMETRIC VIEW

NOT TO SCALE

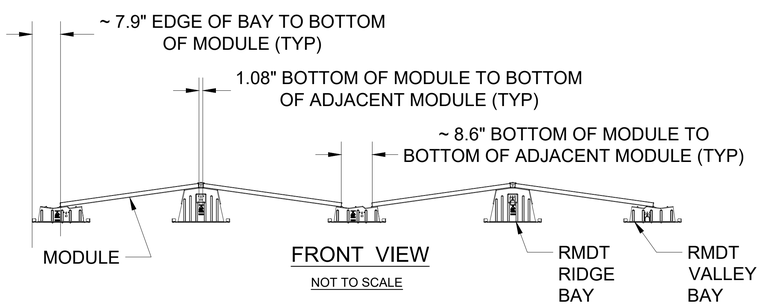


FRONT VIEW

NOT TO SCALE

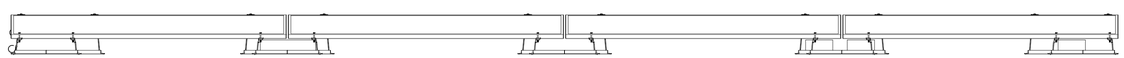

SIDE VIEW

NOT TO SCALE

1 / - 2x4 SAMPLE ARRAY

SCALE: NTS

UNIRAC®
1411 BROADWAY BOULEVARD NE
ALBUQUERQUE, NEW MEXICO, USA, 87102
WWW.UNIRAC.COM

ENGINEER'S STAMP

REVISIONS

| REV | DATE | DESCRIPTION | DRW | CHK |
|---|---|---|---|---|
| 0 | 09/23/2020 | Approved for construction | IS | NT |

FOR

BLACK&VEATCH

PROJECT

NY-150111

J.P.MORGAN CHASE

1460 Route 9
Wappingers Falls, NY 12590

TITLE

RMDT DETAILS

SHEET

RMDT.401


SIDE VIEW
SCALE: NTS

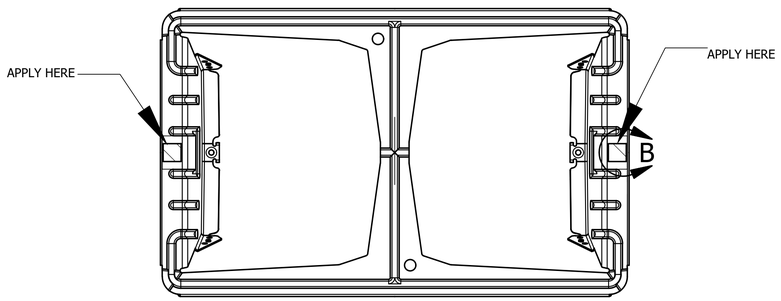


SECTION A-A
SCALE: NTS

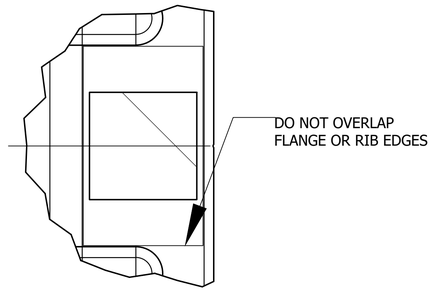


DETAIL B
2X AS SHOWN
SCALE: NTS

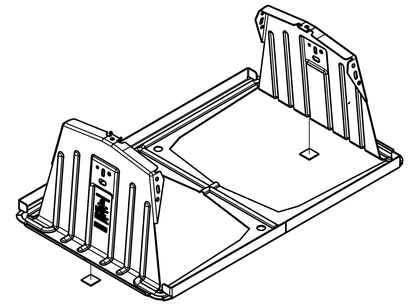

OBLIQUE VIEW
SCALE: NTS

NOTE:
FOR PVC MEMBRANE ROOF APPLY TWO (2) SANTOPRENE PADS PER RIDGE BAY AS SHOWN. SANTOPRENE PAD ONLY REQUIRED ON ROOFS WITH PVC MEMBRANE. FIELD VERIFY PVC ROOF MEMBRANE PRIOR TO PURCHASING PART NUMBER M60700.

1 - RMDT RIDGE BAY SANTOPRENE DETAILS


SIDE VIEW
SCALE: NTS

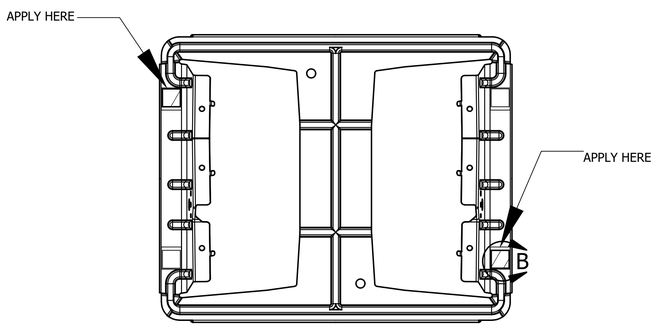


SECTION A-A
SCALE: NTS

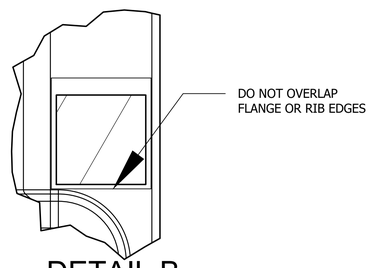


DETAIL B
2X AS SHOWN
SCALE: NTS

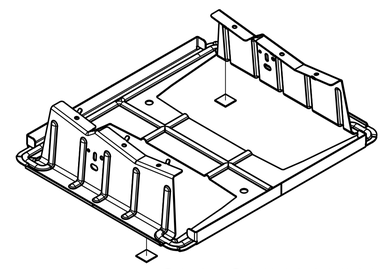

OBLIQUE VIEW
SCALE: NTS

NOTE:
FOR PVC MEMBRANE ROOF APPLY TWO (2) SANTOPRENE PADS PER VALLEY BAY AS SHOWN. SANTOPRENE PAD ONLY REQUIRED ON ROOFS WITH PVC MEMBRANE. FIELD VERIFY PVC ROOF MEMBRANE PRIOR TO PURCHASING PART NUMBER M60700.

2 - RMDT VALLEY BAY SANTOPRENE DETAILS

UNIRAC®
1411 BROADWAY BOULEVARD NE
ALBUQUERQUE, NEW MEXICO, USA, 87102
WWW.UNIRAC.COM

ENGINEER'S STAMP

REVISIONS

| REV | DATE | DESCRIPTION | DRW | CHK |
|---|---|---|---|---|
| 0 | 08/23/2020 | Approved for construction | IS | NT |

FOR
BLACK&VEATCH

PROJECT
NY-150111
J.P.MORGAN CHASE
1460 Route 9
Wappingers Falls, NY 12590

TITLE
RMDT SANTOPRENE DETAILS

SHEET
RMDT.402

# RMDT SYSTEM LEVEL FIRE CODE COMPLIANCE

INSTALLATION GUIDE | 3 PAGE

SYSTEM LEVEL FIRE CLASSIFICATION: The system fire class rating is only valid when the installation is conducted in accordance with the assembly instructions contained in this manual. RM ROOFMOUNT has been classified to the system level fire portion of UL1703. It has achieved Class A performance for low sloped roofs when used in conjunction with type 1 and type 2 module constructions. Please see the specific conditions below for mounting details required to maintain the Class A fire rating. Minimum and maximum roof slopes are restricted through the system design and layout rules. The fire classification rating is only valid on roof pitches less than 2:12 (slopes < 2 inches per foot, or 9.5 degrees).

**NOTE: Type I or Type II information is generally located on back of modules or through manufacturers documentation. Some building codes and fire codes require minimum clearances around such installations, and the installer should check local building code requirements for compliance.**

| Module Type | System level Fire Rating | Mitigation |
|---|---|---|
| Type 1 | Class A | None Required / No Limitations |
| Type 2 | Class A | None Required / No Limitations |

**TYPE 1 / TYPE 2 CLASS A FIRE RATING MOUNTING ORIENTATION**

Unirac RM Dual tilt has achieved Class A system level fire performance for type 1 and type 2 module constructions. There are no provisions necessary in order to meet Class A requirements for this product.

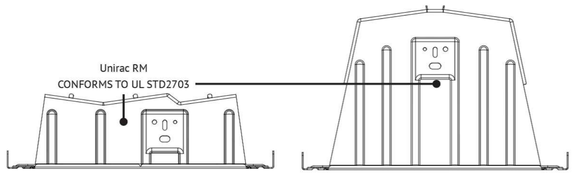


1 - FIRE RATING
SCALE: NTS

PZSE structural ENGINEERS

June 11, 2020

Unirac
1411 Broadway Boulevard NE
Albuquerque, New Mexico 87102-1545
TEL: (505) 242- 6411
FAX: (505) 242-6512

Attn.: Engineering Department,

Re: Engineering Certification for the Unirac RMDT Roof Mounted Ballasted Photovoltaic Panel Support System.

The Unirac RMDT Roof Mounted Ballasted Photovoltaic Panel Support System is a proprietary framed ballasted assembly which supports Photovoltaic panels. The ballast frames hold the PV panels and are ballasted with concrete blocks as required for the wind loads. The wind uplift loads are resisted directly by the ballast. Lateral forces, both wind and seismic, are resisted by friction between the ballast and the roof surface. For wind forces, the system is designed for no lateral or vertical displacement of the array. For seismic forces, the system is designed per SEAOC PV1-2012 requirements for lateral movement/displacement.

The ballasting requirements are determined using the Unirac online "U-Builder RMDT" Design Assistant tool. The Design Assistant covers a wide range of system configurations and allows for the user to customize the input to match the specific project loading and site conditions.

We have reviewed the Unirac RMDT Roof Mounted Ballasted Photovoltaic Panel Support System, the RDWI wind tunnel test results and the Unirac ballasted system design methodology and have determined that the Unirac RMDT ballasted system design methodology is a rational approach and is in compliance with the structural requirements of the following Reference Documents:

Codes: ASCE/SEI 7-10, ASCE/EI 7-16 Minimum Design Loads for Buildings and other Structures
International Building Code, 2012, 2015 & 2018 Editions
2020 NY State Building Code, Buildings Standards and Codes

Other: Aluminum Design Manual, 2010 & 2015 Editions
RWDI Wind Pressure Study Report #1600097
SEAOC PV1-2012 Report – Structural Seismic Requirements and Commentary for Rooftop Solar PV Arrays
SEAOC PV2-2012 Report - Wind Design for Low-Profile Solar Photovoltaic Arrays on Flat Roofs
Terrapin Testing #TT516003-ASTM G115 Coefficient of Friction Testing Report

This letter certifies that the Unirac RMDT Roof Mounted Ballasted Photovoltaic Panel Support System and the Unirac online "U-Builder RMDT" Design Assistant tool are in compliance with the above Reference Documents.

If you have any questions on the above, do not hesitate to call.

Prepared By:
PZSE, Inc. - Structural Engineers
Roseville, CA

STATE OF NEW YORK · PAUL K. ZACHER · 091365 · LICENSED PROFESSIONAL ENGINEER

1478 Stone Point Drive, Suite 190, Roseville, CA 95661
T 916.961.3960 F 916.961.3965 W www.pzse.com
Experience | Integrity | Empowerment

2 - CERTIFICATE LETTER
SCALE: NTS

CSA GROUP™

## Certificate of Compliance

**Certificate:** 70072584 **Master Contract:** 266909

**Project:** 80008354 **Date Issued:** 2019-08-28

**Issued To:** **Unirac**
**1411 Broadway NE**
**Albuquerque, New Mexico, 87102**
**United States**

**Attention: Klaus Nicolaedis**

***The products listed below are eligible to bear the CSA Mark shown with adjacent indicators 'C' and 'US' for Canada and US or with adjacent indicator 'US' for US only or without either indicator for Canada only.***

**Issued by:** Michael Hoffnagle
Michael Hoffnagle

C US

**PRODUCTS**
CLASS - C531302 - POWER SUPPLIES- PHOTOVOLTAICS- PV Racking
CLASS - C531382 - POWER SUPPLIES- PHOTOVOLTAICS PV Racking and clamping systems-Certified to US Standards

Models: RM 5 South – South facing, low-slope, ballasted roof-mount PV racking system
RM DT – East-West facing, low-slope, ballasted roof-mount PV racking system

The systems listed are designed to provide bonding/grounding, and mechanical stability for photovoltaic modules. The system employs galvanized steel bays, ballasted with ASTM C1491 concrete blocks. Modules are secured to the racking system with stainless steel end and mid clamps. Where applicable, the system may employ fire skirts and/or wind deflectors made from 18 gauge G180 steel. The modules are bonded to the racking system with anodization-piercing clamps. The system is grounded with 10 AWG copper wire to bonding/grounding lugs.

The grounding of the system is intended to comply with the latest edition of the National Electrical Code, to include NEC 250 & 690. Local codes compliance is required, in addition to national codes. All

3 - CERTIFICATE OF COMPLIANCE
SCALE: NTS

CSA Group

**Descriptive Report and Test Results**

**MASTER CONTRACT:** 266909
**REPORT:** 70072584
**PROJECT:** **70170881**

Edition 1: August 12, 2016; Project 70072584 – Albuquerque
Prepared by Chase Henson; Reviewed by Ze Guo

Contents: Certificate of Compliance - Page 1 to 2
Supplement to Certificate of Compliance - Page 3
Description and Tests - Pages 1 to 4
Att1 Test Report - 1 to 31
Att2 RM 5 Installation Manual - 1 to 16
Att3 RM DT Installation Manual - 1 to 17

Edition 2: March 15, 2017; Project 70103370 – Albuquerque
Prepared by Andrew Koretoff

Contents: Certificate of Compliance - Page 1 to 2
Supplement to Certificate of Compliance - Page 3
Description and Tests - Pages 1 to 4
Att1 Test Report - 1 to 31
Att2 RM 5 Installation Manual - 1 to 16
Att3 RM DT Installation Manual - 1 to 17

Edition 3: October 3, 2017; Project 70127301 – Albuquerque
Prepared by Michael Hoffnagle

Contents: Certificate of Compliance - Page 1 to 2
Supplement to Certificate of Compliance - Page 3
Description and Tests - Pages 1 to 9
Att1 RM 5 Installation Manual - 1 to 17
Att2 RM DT Installation Manual - 1 to 18
Att3 RM series schematics – 1 to 34

**Edition 4:** **March 28, 2018; Project 70170881 and 70172951 – Irvine**
**Prepared by Michael Hoffnagle**

**Contents:** **Certificate of Compliance - Page 1 to 2**
**Supplement to Certificate of Compliance - Page 3**
**Description and Tests - Pages 1 to 11**
**Att1 RM 5 Installation Manual - 1 to 16**
**Att2 RM DT Installation Manual - 1 to 18**
**Att3 RM series schematics – 1 to 34**



34 Bunsen, Irvine, CA, U.S.A. 92606
Telephone: 949.733.4300 1.800.463.6727 Fax: 949.733.4320 www.csagroup.org

DQD 507.10 Rev 2016-01-18

4 - DESTRUCTIVE TEST REPORT
SCALE: NTS

UNIRAC®
1411 BROADWAY BOULEVARD NE
ALBUQUERQUE, NEW MEXICO, USA, 87102
WWW.UNIRAC.COM

ENGINEER'S STAMP

REVISIONS

| REV | DATE | DESCRIPTION | DRW | CHK |
|---|---|---|---|---|
| 0 | 09/23/2020 | Approved for construction | IS | NT |

FOR
BLACK&VEATCH

PROJECT
NY-150111
J.P.MORGAN CHASE

1460 Route 9
Wappingers Falls, NY 12590

TITLE
RMDT CERTIFICATIONS

SHEET
RMDT.500