DRIVEWAY INTERSECTION DETAIL

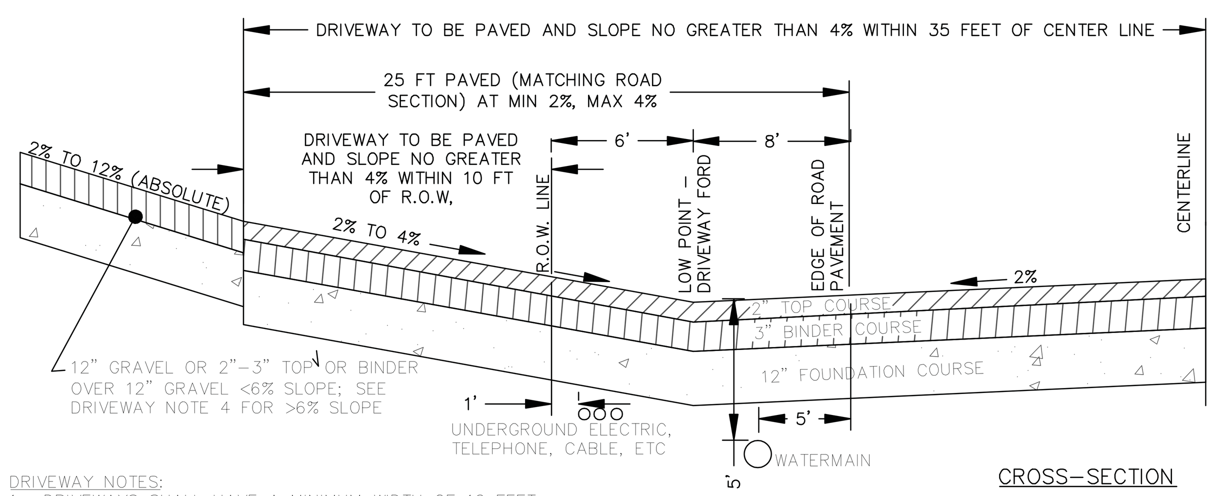

DRIVEWAY NOTES:
1. DRIVEWAYS SHALL HAVE A MINIMUM WIDTH OF 12 FEET.
2. GRADE WITHIN 25 FEET OF EDGE OF ROAD SHALL BE NO LESS THAN 2% AND NO GREATER THAN 4% (ABSOLUTE)
3. FIRST 25 FEET SHALL BE PAVED AS PER ROAD SECTION.
4. ANY DRIVEWAY WITH A GRADE OF 6% OR GREATER SHALL BE PAVED IN ITS ENTIRETY. PAVEMENT SECTION BEYOND FIRST 25 FEET SHALL BE 3" COMPACTED TOP OR BINDER ASPHALT OVER 12" COMPACTED SUBBASE
5. MAXIMUM GRADE BEYOND FIRST 25 FEET FROM EDGE OF ROAD IS 12%

DRIVEWAY INTERSECTION DETAIL
NOT TO SCALE

RURAL STREET
NOT TO SCALE

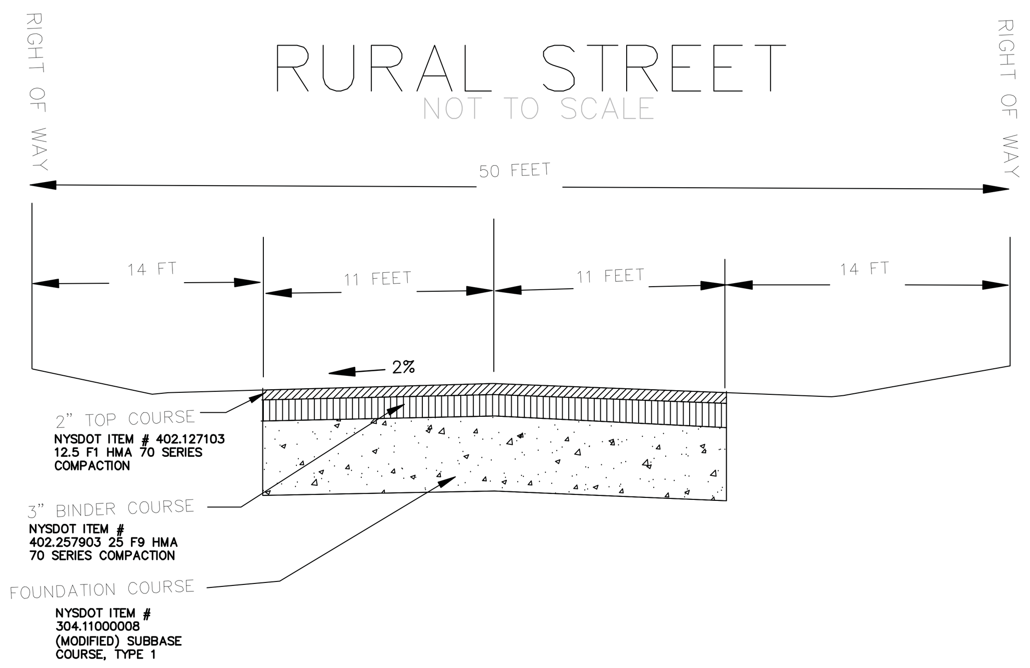

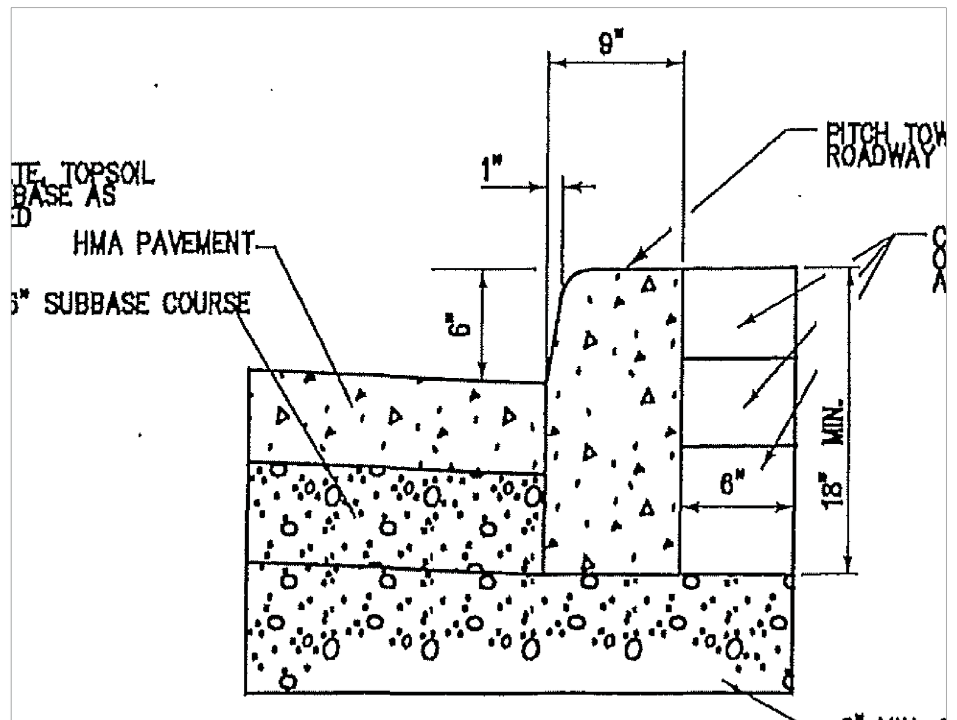

NON-MOUNTABLE CONCRETE CURB

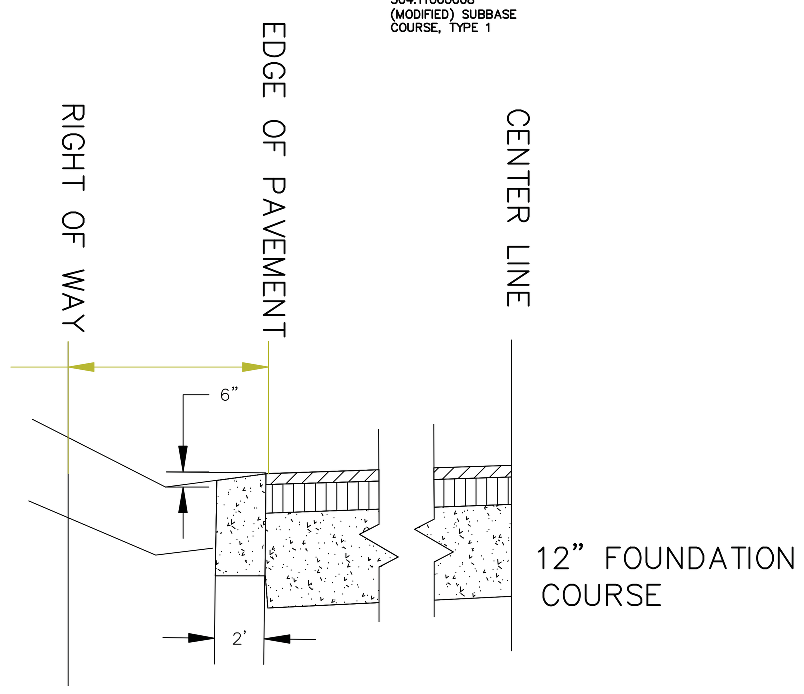

SHOULDER DETAIL
NOT TO SCALE

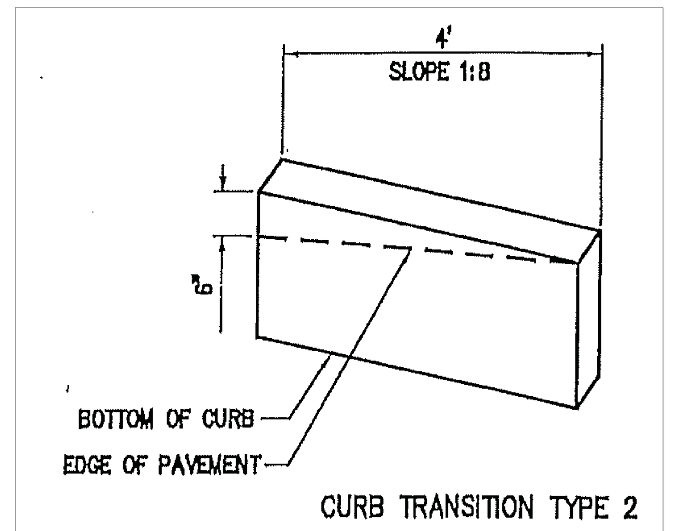

CURB TRANSITION TYPE 2

BIORETENTION PLANTING SCHEDULE

Abbrev.	Scientific Name	Common Name	Min Planting Size	Spacing
Shrubs				
CA	Clethra alnifolia	Sweet Pepperbush	18" Tubling	5 ft o.c.
CS	Cornus stolonifera	Red-Osier Dogwood	18" Tubling	5 ft o.c.
HV	Hamemelis virginiana	Witch Hazel	18" Tubling	5 ft o.c.
IV	Ilex verticillata	Winterberry	18" Tubling	5 ft o.c.
VD	Viburnum dentatum	Arrowwood	18" Tubling	5 ft o.c.
Herbaceous				
AG	Andropogon geradi	Big Bluestem	SP #4	2 ft o.c.
AN	Aster novae-angliae	New England Aster	SP #4	2 ft o.c.
EM	Eupatorium maculatum	Spotted Joe-Pye Weed	SP #4	2 ft o.c.
LC	Lobelia cardinalis	Cardinal flower	SP #4	2 ft o.c.
LS	Lobelia siphatica	Great Blue Lobelia	SP #4	2 ft o.c.
MF	Monarda fistulosa	Wild Bergamot	SP #4	2 ft o.c.
MW	Asclepias (Native varieties)	Milkweed	Plug	2 ft o.c.
PV	Panicum virgatum	Swicth Grass	Plug	2 ft o.c.

NOTES:
1. PLANT THROUGHOUT BIORETENTION AREA IN VARIED, MIXED ARRANGEMENTS WITH CONSIDERATION OF PLANT GROWTH SIZES, COLORS AND APPEARANCE.
2. IF LARGER PLANTS ARE PLANTED, SPACING CAN INCREASE PROPORTIONALLY.
3. OTHER NATIVE, NON–INVASIVE PLANTS MAY BE USED WITH APPROVAL BY ENGINEER AND TOWN PRIOR TO PURCHASE.
4. PLACE FLAT STONES ON MULCH TO ALLOW WALKING ACCESS THROUGH BIORETENTION FOR INSPECTION OF PLANTS AND OBSERVATION PORTS.

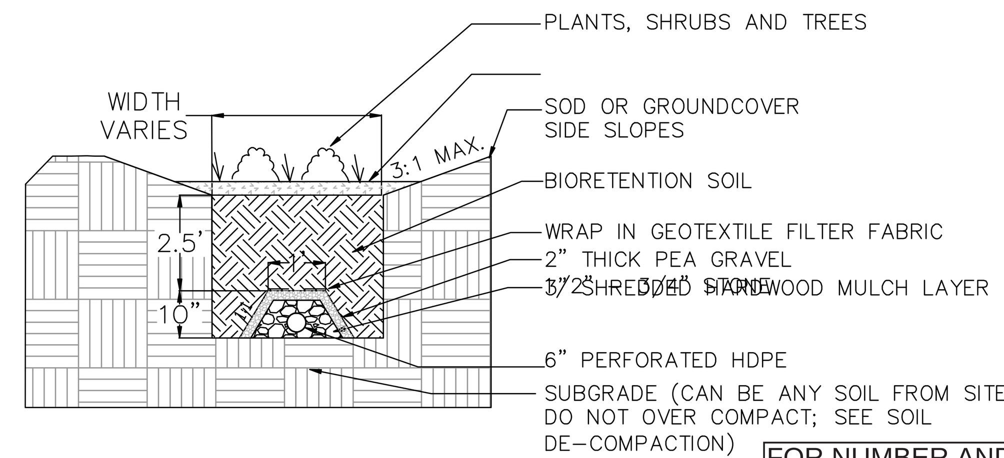

BIORETENTION AREA [BIO]
NOT TO SCALE

FOR NUMBER AND SIZE OF RAIN GARDENS AND BIORETENTION SEE EROSION CONTROL DETAIL SHEET 8

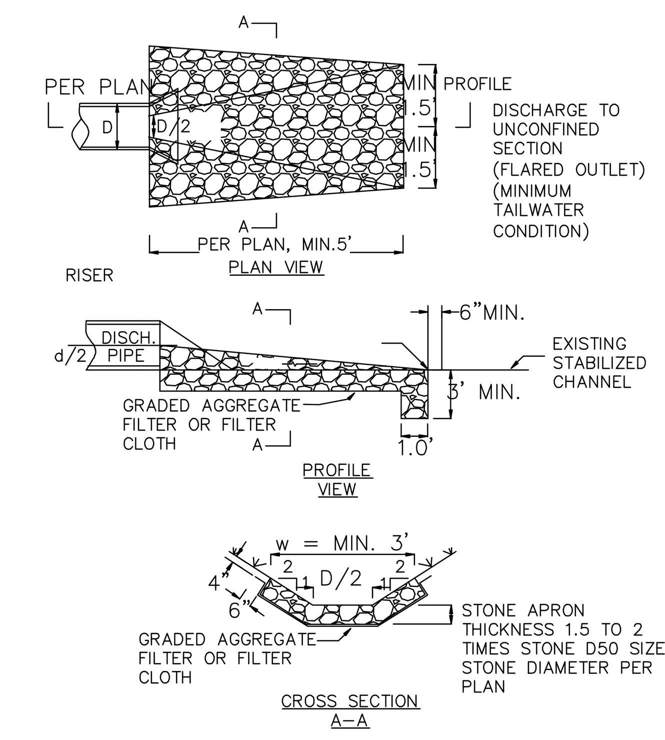

OUTLET APRON
NOT TO SCALE

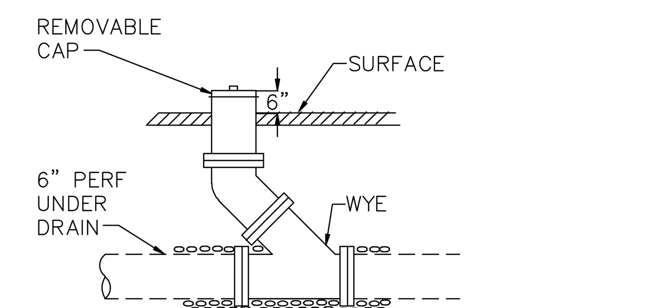

BIORETENTION OBSERVATION WELL / CLEANOUT
NOT TO SCALE

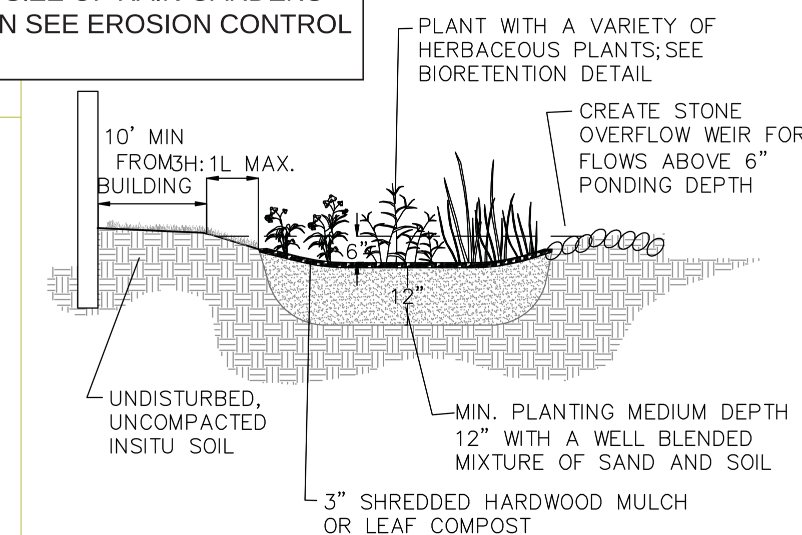

RAIN GARDEN
NOT TO SCALE

SUBDIVISION AND LOCAL ROADS DETAIL
NOT TO SCALE

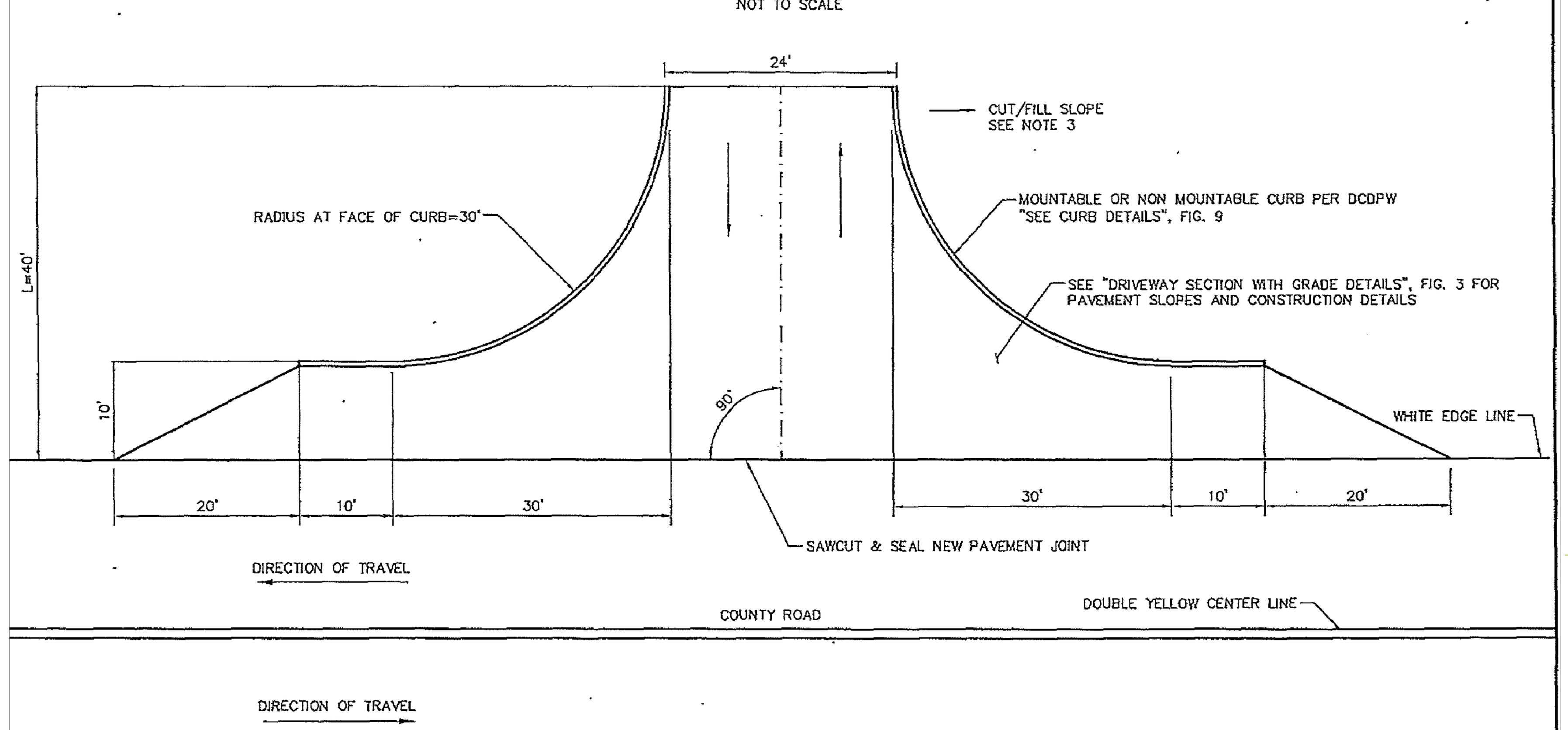

NOTES:

1. DRAINAGE FROM PRIVATE PROPERTY SHALL NOT BE ALLOWED TO FLOW ONTO COUNTY HIGHWAY. IF NECESSARY, PERMITEE WILL BE REQUIRED TO INSTALL DRAINAGE SYSTEM AT PROPOSED DRIVEWAY(S).

2. 2. CUT/FILL SLOPES SHALL BE CONSTRUCTED NO STEEPER THAN 2 HORIZONTAL TO 1 VERTICAL (2:1). DCDPW SHALL EVALUATE CUT/FILL SLOPES FOR ACCEPTABILITY.

ENTRANCE PAVING:

1.5" COMPACTED HMA TOP COURSE
3" COMPACTED HMA BINDER COURSE
4" COMPACTED HMA BASE COURSE (2 LIFTS)
12" COMPACTED SUB–BASE COURSE

DUTCHESS COUNTY
DEPARTMENT OF PUBLIC WORKS
HIGHWAY WORK PERMIT POLICY

SUBDIVISION AND LOCAL ROADS DETAIL

DATE: MAY 1, 2014 FIG. 8

DRIVEWAY SECTION WITH GRADE DETAIL
NOT TO SCALE

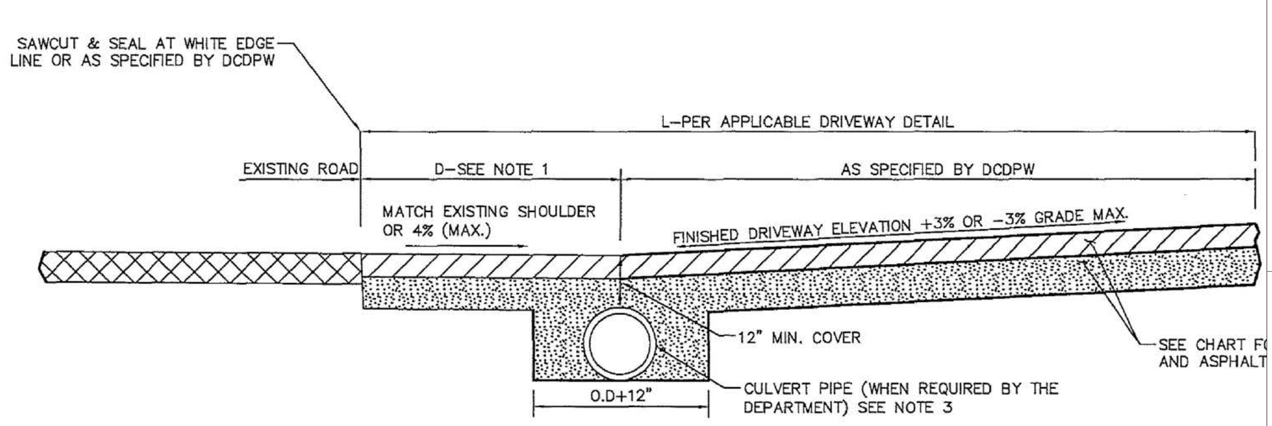

ASPHALT AND SUBBASE COURSE THICKNESS		
	SUBBASE	ASPHALT
AGRICULT./FIELD ENTRANCE	4"	N/A
SINGLE RESIDENTIAL DRIVEWAY	4"	3"
COMMON RESIDENT. DRIVEWAY	6"	4"
MINOR COMMERCIAL DRIVEWAY	6"	4"

* ALL DRIVEWAY MATERIAL COURSES ARE FINISHED, COMPACTED THICKNESS AND SHALL CONFORM TO NYSDOT PAVEMENT MATERIAL SPECIFICATIONS.

NOTES:

1. FOR RESIDENTIAL DRIVEWAYS, D=6' OR DISTANCE TO DITCH. FOR COMMERCIAL/SUBDIVISION DRIVEWAYS D=20'

2. ASPHALT IS TO BE PLACED IN 2" MAX. LIFTS.

3. CULVERT PIPE IS TO BE MADE OF REINFORCED CONCRETE OR SMOOTH INTERIOR CORRUGATED PLASTIC PIPE WITH A MIN. DIAMETER OF 12" AND 1% (MIN.) PITCH.

4. IF A DRIVEWAY PIPE IS REQUIRED END SECTIONS MUST BE INSTALLED.

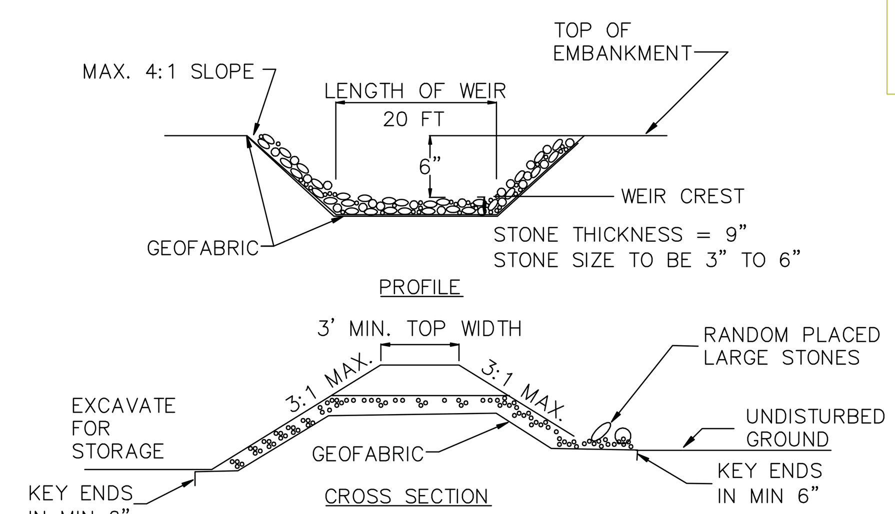

BIORETENTION WEIR OUTFALL DETAIL
NOT TO SCALE

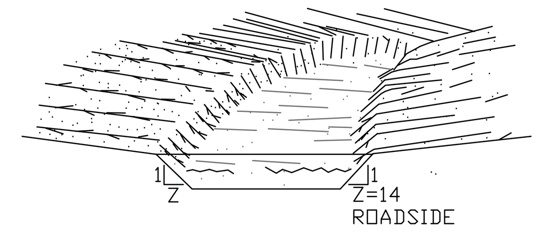

2' ROAD SIDE
OR PER PLAN
TRAPEZIODAL CROSS SECTION

CONSTRUCTION SPECIFICATIONS

1. ALL TREES, BRUSH, STUMPS, OBSTRUCTIONS, AND OTHER OBJECTIONABLE MATERIAL SHALL BE REMOVED AND DISPOSED OF SO AS NOT TO INTERFERE WITH THE PROPER FUNCTIONING OF THE WATERWAY.
2. THE WATERWAY SHALL BE EXCAVATED OR SHAPED TO LINE, GRADE, AND CROSS SECTION AS REQUIRED TO MEET THE CRITERIA SPECIFIED HEREIN, AND BE FREE OF BANK PROJECTIONS OR OTHER IRREGULARITIES WHICH WILL IMPEDE NORMAL FLOW.
3. FILLS SHALL BE COMPACTED AS NEEDED TO PREVENT UNEQUAL SETTLEMENT THAT WOULD CAUSE DAMAGE IN THE COMPLETE WATERWAY.
4. ALL EARTH REMOVED AND NOT NEEDED IN CONSTRUCTION SHALL BE SPREAD OR DISPOSED OF SO THAT IT WILL NOT INTERFERE WITH THE FUNCTIONING OF THE WATERWAY.
5. STABILIZATION SHALL BE DONE ACCORDING TO THE APPROPRIATE STANDARD AND SPECIFICATIONS FOR VEGETATIVE PRACTICES.
5.A. SEEDING AND MULCHING MAY BE USED FOR THE ESTABLISHMENT OF THE VEGETATION. IT IS RECOMMENDED THAT, WHEN CONDITIONS PERMIT, TEMPORARY WATERWAYS OR OTHER MEANS SHOULD BE USED TO PREVENT WATER FROM ENTERING THE WATERWAY DURING THE ESTABLISHMENT OF THE VEGETATION.
6. BLEND TO DRIVEWAY CROSS SECTION

GRASSED WATERWAY
NO TO SCALE

SPACING BETWEEN DITCH CHECK

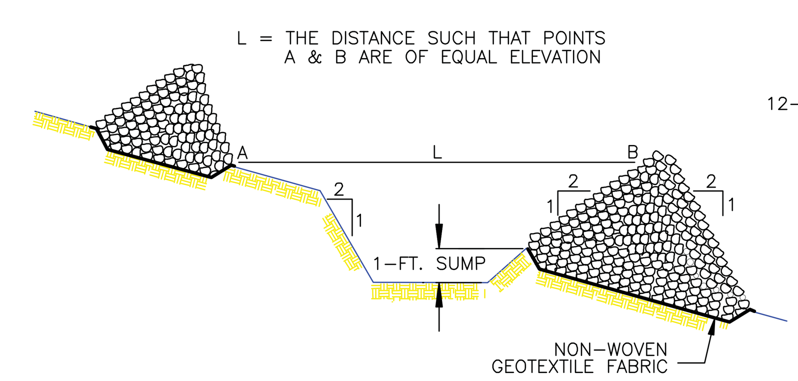

CROSS SECTION A-A THRU STONE DITCH CHECK

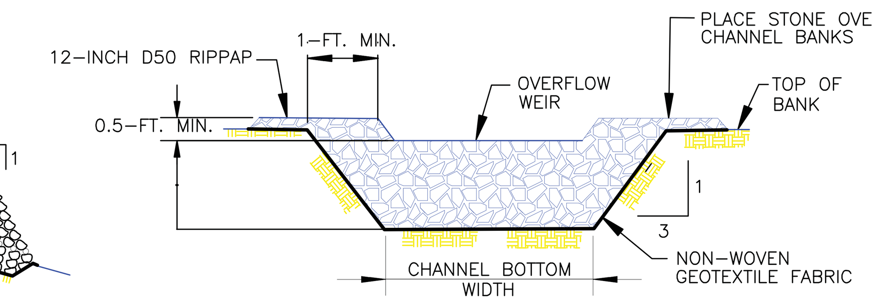

TYPICAL DITCH CHECK SECTION

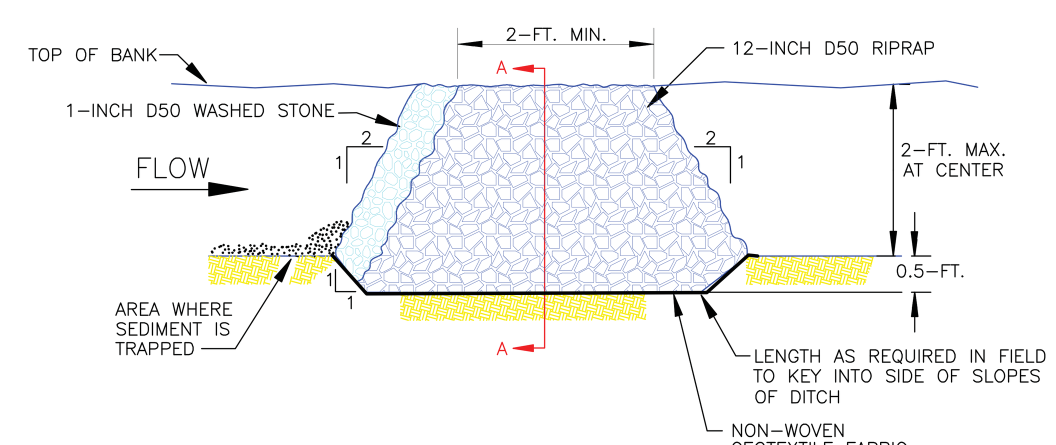

PLAN SYMBOL

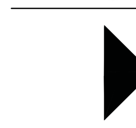

ROCK DITCH CHECK
NOT TO SCALE

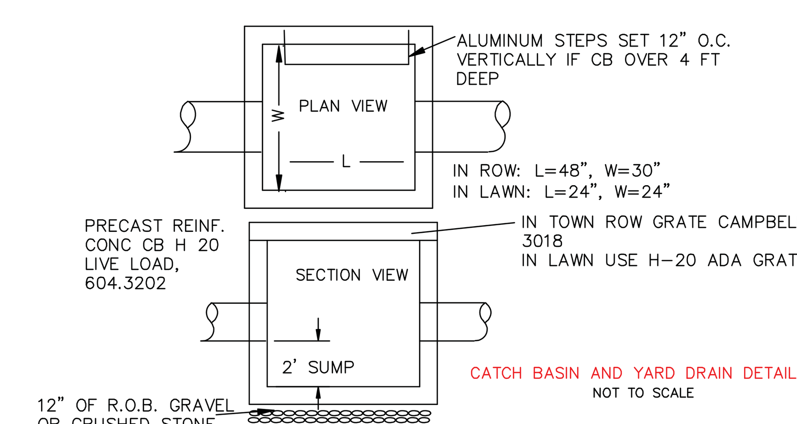

CATCH BASIN AND YARD DRAIN DETAIL
NOT TO SCALE

01/5/21
SH 9 of 13

1	05/26/22	revised drawings	JPB
2	07/20/22	revised drawings	JPB

GENERAL SITE DETAILS

MYERS RUN
MYERS CORNERS ROAD
TOWN OF WAPPINGER NY

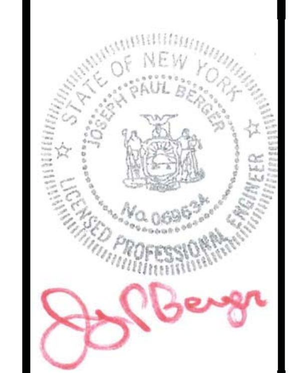

BERGER ENGINEERING AND SURVEYING
100 FULTON AVE.
POUGHKEEPSIE N.Y. 12603
(845) 471 - 7383
bergerengr@gmail.com
PE REGISTRATION 069634 CERT 0405443 EXPIRE ON 04-30-25
LS REGISTRATION 049745 CERT 1255930 EXPIRE ON 04-30-24
COA FOR PE AND LS CERT 0018252 AND 0018253