**PLANNING BOARD of the TOWN of WAPPINGER,**
**DUTCHESS COUNTY, NEW YORK**

In the Matter of the Special Use Permit and Site Plan Review Application of

---

**VERIZON WIRELESS OF THE EAST LP d/b/a Verizon Wireless**
SITE NAME: SPOOK HILL PARK MICRO

Public ROW Adjacent to 15 Nancy Aleen Drive
Town of Wappinger, Dutchess County
Tax Map No. N/A

---

Submitted by:


Verizon Wireless
Kathy Pomponio, Manager - Network Real Estate
1275 John Street, Suite 100
West Henrietta, New York 14586
(585) 321-5435

Tectonic Engineering & Surveying Consultants, P.C.
Steven Matthews, P.E.
36 British American Blvd, Suite 101
Latham, New York 12110
(518) 783-1630

Tectonic Engineering & Surveying Consultants, P.C.
Nate Keenan, Project Manager
36 British American Blvd, Suite 101
Latham, New York 12110
(518) 783-1630

Young/Sommer LLC
Scott P. Olson, Esq.
Executive Woods
Five Palisades Drive
Albany, New York 12205
(518) 438-9907


Dated: May 10, 2023

TOWN OF WAPPINGER PLANNING BOARD

**Application No.** _____
Date Received: _____
Fee Received: _____
Escrow Received: _____

## APPLICATION FOR SITE PLAN APPROVAL

TITLE OF PROJECT: Verizon Wireless - Spook Hill Park Small Wireless Facility

Location of Property: Adj. to 15 Nancy Aleen Dr.

NAME & ADDRESS OF APPLICANT (Corporation or Individual):

Verizon Wireless of the East LP d/b/a Verizon Wireless

1275 John St., Suite 100, W. Henrietta NY 14586

Street Town State Zip

c/o Scott Olson 518.449.9907 SOlson@youngsommer.com

Contact Person Phone Number Email

NAME & ADDRESS OF OWNER (Corporation or Individual):

Public ROW

Street Town State Zip

Contact Person Phone Number Email

Grid No. Public ROW

Please specify use or uses of building and amount of floor area devoted to each:

Existing Use: Public ROW

Proposed Use: Installation and operation of 50' (class 2) wooden utility pole with antenna, equipment and utilities.

Existing Sq. Footage: N/A Use: _____

Proposed Sq. footage: N/A Use: _____

Location of Property: Corner of Nancy Aleen Dr. and Spook Hill Rd.

Zoning District: R-20 Acreage: N/A

Anticipated No. of Employees: N/A

Existing No. of Parking Spaces: N/A Proposed No. of Parking Spaces: N/A

Verizon Wireless of the East LP d/b/a Verizon Wireless

Type Name (Corporation, LLC, Individual, etc.)

5/3/23

Date

Scott Olson

Owner or representative's signature

518.449.9907 Ext. 258

~~Owner's~~ Telephone No.

Applicant's

Scott Olson, Attorney

Type Name and Title ***

1275 John St., Suite 100, W. Henrietta, NY 14586

~~Owner~~'s Address

Applicant's

*****If this is a Corporation or LLC please provide documentation of authority to sign.**

Note: *The applicant is responsible for the cost involved in publishing the required legal notice in the local newspaper;

* If Special Use Permit for the above use has been applied for, please check ☑.

- **Application Fees are non-refundable.**

TOWN OF WAPPINGER PLANNING BOARD
**SPECIAL USE PERMIT**

**Application No.** _____
Date Received: _____
Fee Received: _____
Escrow Received: _____

IN ACCORDANCE WITH THE PROVISIONS OF SECTION 240-53 0F THE TOWN OF WAPPINGER ZONING LAW, I HEREBY MAKE APPLICATION TO THE PLANNING BOARD OR TOWN BOARD FOR THE ISSUANCE OF A SPECIAL PERMIT FOR THE USE OF;

PROJECT NAME Verizon Wireless - Spook Hill Park Small Wireless Facility

GRID NO. Public ROW ZONING DISTRICT R-20

PROPERTY LOCATION Corner of Nancy Aleen Dr. and Spook Hill Rd.

NAME & ADDRESS OF APPLICANT (Corporation or Individual):
Verizon Wireless of the East LP d/b/a Verizon Wireless
1275 John St, Suite 100, W. Henrietta, NY 14586
Street Town State Zip
c/o Scott Olson 518. 445. 9507 Ext. 258 Solson@youngsommer.com
Contact Person Phone Number Email

NAME & ADDRESS OF OWNER (Corporation or Individual):
Public ROW
Street Town State Zip
Contact Person Phone Number Email

**Pursuant to section(s):** §240-81 (D)(3)

II. CONCURRENTLY WITH THE ABOVE APPLICATION, AND IN ACCORDANCE WITH THE PROVISIONS OF SECTION 450 OF SAID ORDINANCE, I HEREBY MAKE APPLICATION FOR SITE PLAN APPROVAL OF THE FOLLOWING PLANS TO CONDUCT SUCH USE ON THE AFORESAID PARCEL.

III.
MAP TITLED: _____
PREPARED BY: _____
DATED: _____

III. I HAVE, AS PART OF THESE CONCURRENT APPLICATIONS, SUBMITTED A "STATEMENT OF USE" WHICH FULLY DESCRIBES THE OPERATION AND MAINTENANCE OF SAID USE LISTED IN THE APPLICATION: (Use EXTRA SHEET IF NECESSARY)

## Continued page 2 for Special Use Permit

Verizon Wireless of the East LP d/b/a Verizon Wireless

Type Name (Corporation, LLC, Individual, etc.)

5/3/23

Date

Scott Olson

Owner or representative's signature

518. 445. 9507 Ext. 258

~~Owner's~~ Telephone No.

Applicants

SCOTT OLSON, ATTORNEY

Type Name and Tit

1275 John St., Suite 100, W. Henrietta, NY 14586

~~Owner's~~ Address

Applicants

***If this is a Corporation or LLC please provide documentation of authority to sign.

- 
- THE REQUIRED FEES (NON-REFUNDABLE) AND PLANS MUST ACCOMPANY THE APPLICATION.
- APPLICANT IS RESPONSIBLE FOR THE COSTS INVOLVED IN PUBLISHING THE REQUIRED LEGAL NOTICE IN THE LOCAL NEWSPAPER.

Town of Wappinger

# SITE PLAN & (REGULAR) SPECIAL PERMIT CHECKLIST

THE FOLLOWING ITEMS MUST BE PRESENTED TO THE ZONING ADMINISTRATOR ON THE SUBMISSION DATE:

| | |
|---|---|
| ____ Applications: | Site Plan Application & Special Use Permit Application (If applicable) Must state if the applicant is the owner or contract vendee. Applications must be typed. Name of Owner and Applicant must be accurate. |
| ____ Signatures: | Must be original signatures. Name of Corporation or LLC, etc must be typed above signature and name and authorization must be typed below signature. |
| ____ Phone Numbers: | Include contact phone number and fax number. |
| ____ Letter of Consent: | If contract vendee, a letter of consent from the owner is required |
| ____ EAF: | Short Form<br>Long Form |
| ____ Application Fee: | Application fee may be paid in cash, or if paying by check, it must be a certified check, bank check, or money order written out to the 'Town of Wappinger' (Separate checks are required for application fees and escrow) |
| ____ Escrow: | Escrow may be paid in cash, or if paying by check, it must be a certified check, bank check, or money order written out to the 'Town of Wappinger' (Separate checks are required for application fees and escrow) |
| 18 Plans: | Plans to be submitted with application to the Planning Board Secretary -Add 19th plan set if on a County or State Road. |

If any item on this list is not applicable to the site plan, please make a written notification on the site plan to that effect:

____ The name and address of the owner of record of the property.

____ The name, address and professional seal of the individual preparing the site plan.

____ The names of all owners of record of adjacent properties.

____ The accurate location of the boundaries of the applicant's property, any existing lot lines, streets, and easements or other reservations located within it.

_____ The location of all existing buildings, structures, and other man-made features of the site, as well as those on adjacent properties within one hundred (100) feet of the property boundary including existing utility lines.

_____ The proposed location, use, design of all buildings and structures.

_____ A tabular analysis of the proposed use of all floor space clearly indicating the proposed type of use by building, floor level, and the proposed division of buildings into units of separate occupancy.

_____ The location and design of all driveways, parking, and loading areas including improvements to adjoining streets designed to facilitate the face and convenient flow of traffic to and from the site.

_____ The location and design of the proposed water supply, sewage disposal, stormwater drainage systems, including the relationship of these t related off site facilities, services, and systems along with an analysis of the impact of the proposed site's development upon them.

_____ The location and design of all other proposed improvements including signs, exterior lighting, recreational facilities, fences, walls, refuse enclosures, buffer screening, and landscaping.

_____ The proposed nature and location of any uses which will not be located within buildings or structures including outdoor storage and display areas, if any.

_____ Existing and proposed contours with vertical intervals of not more than two (2) feet unless waived by the Planning Board, extending at least fifty (50) feet beyond the site boundaries and referenced to USGS or other proved bench mark.

_____ The nature and location of all other existing site features, including water bodies, water courses, wooded areas, rock outcrops, and single trees with a diameter at breast height (dbh) of twelve (12) or more inches. The plan shall clearly indicate which site features are to be retained and which will be removed.

_____ Appropriate plans for the protection of the site's environment during the course of construction, including erosion control, protection of existing vegetation, noise control, limits of hours of operation, access route for construction vehicles and other similar measures as may be appropriate in each individual case

_____ Any other pertinent information as may be determined necessary or appropriate by the Planning Board or the Zoning Administrator to provide for the proper enforcement of this Ordinance.

In addition, the following items of information shall also accompany any site development plan application:

- The proposed wording of any covenants, deed restriction or association agreement which are intended to apply to all or any part of the subject property.
- Plans and elevations of all proposed buildings, structures, and accessory structures, including proposed signs.
- Where the applicant proposed to develop the project in stages, a staging plan shall be submitted for approval along with the ultimate development plan for the entire parcel.

__18__ Application shall consist of (number of plans to be determined by the Zoning Administrator) copies of the applicant's proposed site development plan, drawn at as large a scale as is convenient practical and reasonably possible showing the proceeding items of information.

_____ Also including on the plan (or a separate sheet) an area map, at a scale convenient for Planning Board use, showing the applicant's entire property as well as all adjacent properties, existing and proposed roads, railroads, streams, right-of-way, and easements in all directions from the subject parcel, all community facility and utility trunk lines in the neighboring area, and all existing school, zoning and special district boundaries within five-hundred (500) feet of the applicants property.

_____ Application fees: Please refer to current fee schedule.

_____ ~~EAF: Long or Short must be signed.~~

_____ Maps: MUST BE FOLDED or will be rejected.

**PLANNING BOARD of the TOWN of WAPPINGER,**
**DUTCHESS COUNTY, NEW YORK**

In the Matter of the Special Use Permit and Site Plan Review Application of

---

**VERIZON WIRELESS OF THE EAST LP d/b/a Verizon Wireless**

Premises: Public ROW Adjacent to 15 Nancy Aleen Drive
Town of Wappinger, Dutchess County
Tax Map No. N/A
SITE NAME: SPOOK HILL PARK MICRO

---

**STATEMENT OF INTENT and**
**APPLICATION FOR SPECIAL USE PERMIT and SITE PLAN REVIEW**

## I. Introduction

VERIZON WIRELESS OF THE EAST LP d/b/a Verizon Wireless ("Verizon Wireless" or the "Applicant") proposes to install a new fifty-foot (50') utility pole and antenna at the top thereof, with related cables and related equipment in the Town of Wappinger (collectively, the "Small Wireless Facility"). The Small Wireless Facility, including the components thereof, is described on the site plans prepared by Tectonic Engineering in Exhibit 1.

Verizon Wireless is considered a public utility under New York decisional law (*Cellular Telephone Company v. Rosenberg*, 82 N.Y.2d 364 (1993)) [Exhibit 2], and a provider of "personal wireless services" under the federal Telecommunications Act of 1996 (the "TCA") [Exhibit 3]. Verizon Wireless' equipment will be in operation twenty-four (24) hours a day, seven (7) days a week, three hundred sixty-five (365) days a year. A copy of the applicable Verizon Wireless FCC licenses is included herewith Exhibit 4.

## II. Purpose of Spook Hill Park Micro Communications Facility

Enclosed in Exhibit 5 is an RF Analysis prepared by a qualified Radio Frequency ("RF") Design Engineer which analysis describes in detail the need for this new site at this location.[1] As detailed in the RF justification, the Facility is needed to resolve significant coverage gaps and capacity issues experienced in the surrounding area, which are not able to be addressed by modifications to the two adjoining Verizon Wireless sites referred to as

---

1 The RF Analysis in Exhibit 5 also covers a second site proposed by Verizon Wireless referred to internally as the "Kent Rd" site. Both sites are intended to provide infill service between two existing Verizon Wireless sites (known internally by Verizon Wireless as Swartoutville and Wappinger Falls.

the "Swartoutville" and the "Wappinger Falls" sites. Exhibit 6 includes a Site Selection Analysis that describes the methodology of identifying the proposed location for the Project.

The purpose of this site and the similar Kent Rd site (an application for which is being submitted simultaneously with this current application) is to provide infill service to small areas within the Town that cannot be served by the two nearest Verizon Wireless sites in a manner that will minimize potential visual impacts to the greatest extent possible (i.e., avoiding a new full-sized macro facility in this part of the Town).

## III. Additional Supporting Materials

1. **Public Necessity of Facility.** The Applicant has provided expert proof in the form of a report from its RF Design Engineer depicting the area within which Verizon Wireless' communications facility needs to be located (the "search area") in order to provide adequate and safe service to the Town of Wappinger. This report clearly demonstrates that (i) there is an inadequate and unsafe level of service in the targeted area of the Town of Wappinger resulting from a lack of capacity, and (ii) a new communications facility is necessary to provide an adequate and safe level of hand-held wireless service to this area. *See*, Exhibit 5.

   As noted above and in Exhibits 2 and 3, Verizon Wireless is recognized as a public utility under New York law and a provider of personal wireless services under the federal Telecommunications Act of 1996. This project is a public necessity in that it is required to render adequate and safe coverage (mobile and in-building) to a significant portion of the Town of Wappinger. This, combined with the federal mandate to expeditiously deploy advanced wireless services across the nation and Verizon Wireless' FCC licenses to provide such services in the Town of Wappinger, demonstrates that Verizon Wireless' facility is a public necessity. Without the construction of the small wireless facility proposed, the public will be deprived of an essential means of communication, which, in turn, would jeopardize the safety and welfare of the community and traveling public.

2. The Facility has been designed and will be installed and operated to conform to all applicable regulations promulgated by the Federal Communications Commission, the Federal Aviation Administration and other federal agencies.

3. As set forth above, Verizon Wireless and the proposed facility are considered public utilities for purposes of zoning under existing New York decisional law.

4. Operation of the facility will not involve any objectionable noise, fumes, vibration or other characteristics.

5. The facility will be operated on a 24/7 basis, 365 days a year with minimal maintenance required. Adequate access and parking have been incorporated into the facility design.

6. The facility will not increase or otherwise impact any existing traffic patterns, nor will it impair pedestrian or vehicular safety or overload existing roads. Additionally, the facility will be fully accessible to fire, police and other emergency vehicles.

7. Because the facility will be unmanned, it will not involve the use of any public water, drainage or sewer system, or any other municipal facility, or degrade any act or for, natural resource or ecosystem.

8. Exhibit 7 is a visual analysis of the proposed Small Wireless Facility, including photographs and simulations of the proposed facility. By designing the facility to be similar to a typical utility pole, the Applicant was able to minimize potential visual impacts to the greatest extent practicable.

9. To assist the Town in fulfilling its obligations under the NYS Environmental Quality Review Act ("SEQRA"), a Full Environmental Assessment Form and Visual Addendum ("EAF") has been prepared by Tectonic Engineering and is provided in Exhibit 8.

10. Attached in Exhibit 9 is a Site Compliance Report prepared by SiteSafe, an independent third party engineering firm that specializes in FCC compliance issues. The Site Compliance Report confirms that the proposed Facility will be fully complaint with all applicable FCC RF emission requirements.

11. Small wireless facilities such as those proposed are generally not intended to support collocation of other carriers.

## IV. Conclusion

Approval of the Spook Hill Park Small Wireless Facility will enable Verizon Wireless to provide an adequate and safe level of wireless telephone service to the area of the Town of Wappinger and surrounding environs, within the confines of applicable technological and land use limitations. Specifically, this site will provide infill coverage for areas within the Town not adequately served. Such approval will also be in the public interest, in that it will allow Verizon Wireless to comply with its statutory mandate to build out its network and provide local businesses, residents and public service entities with safe and reliable wireless communications services. Based upon the foregoing, Verizon Wireless respectfully submits that this project complies in all material respects with the Special Use Permit and Site Plan Review requirements of the Town of Wappinger's Zoning Code, and any potential impact on the community created by this approval may properly be considered minimal and of no significant adverse effect.

If you should have any questions or require any additional information, I can be reached at (518) 438-9907, Ext. 258.

Thank you for your consideration.

Respectfully submitted,
VERIZON WIRELESS OF THE EAST LP D/B/A
VERIZON WIRELESS

Scott Olson

Scott P. Olson, Esq.
Regional Local Counsel

Dated: May 3, 2023

# VERIZON WIRELESS OF THE EAST LP,
# d/b/a

verizon

# SPOOK HILL PARK MICRO

## REAL ESTATE P/N: 20222384944
## LOCATION CODE: 729798
## UTILITY POLE #: TBD

N

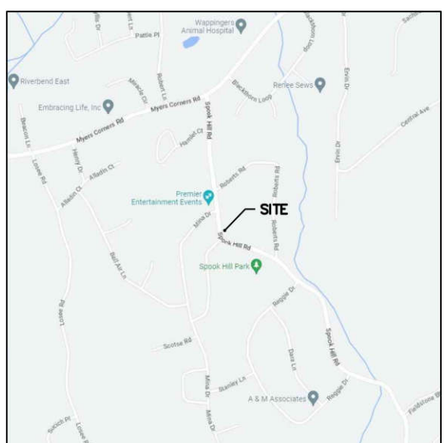


VICINITY MAP

## DIRECTIONS

DIRECTIONS TO SITE:
FROM NORTH GREENBUSH SWITCH FACILITY, GET ON I-90 W FROM US-4 S AND NY-43 W (72.6± MI). TAKE EXIT 18 FOR NY-299 E (6.0± MI). TURN RIGHT ONTO RTE 9W (2.3± MI). TAKE RAMP TO MID HUDSON BRIDGE/POUGHKEEPSIE (0.4± MI). CONTINUE ONTO US-44 E (1.7± MI). MERGE ONTO US-9 S (8.3± MI). TURN LEFT ONTO MYERS CORNER RD (0.7± MI). TURN RIGHT ONTO SPOOK HILL RD (0.3± MI). SITE WILL BE ON THE LEFT.

| | |
|---|---|
| SITE ADDRESS: | ADJ TO 15 NANCY ALEEN DR<br>WAPPINGERS FALLS, NY 12590 |
| MUNICIPALITY: | TOWN OF WAPPINGER |
| COUNTY: | DUTCHESS |
| TAX MAP NUMBER: | PUBLIC R.O.W. |
| ZONING DISTRICT: | ONE-FAMILY RESIDENTIAL (R-20) |
| STRUCTURE COORDINATES: | N 41° 35' 13.91" (41.587197°)<br>W 73° 53' 38.10" (-73.893917°) |
| GROUND ELEVATION: | 237'± AMSL |
| POLE OWNER: | VERIZON WIRELESS |
| POLE #: | TBD |
| APPLICANT: | VERIZON WIRELESS<br>1275 JOHN STREET, SUITE 100<br>WEST HENRIETTA, NY 14586 |
| CONTACT PERSON: | KATHY POMPONIO |
| CONTACT PHONE: | (585) 321-5435 |

## PROJECT SUMMARY

## PROJECT DESCRIPTION

THE PROPOSED WORK CONSISTS OF:

- PROPOSED 50' (CLASS 2) WOODEN UTILITY POLE.
- INSTALL (1) CELLULAR ANTENNA & ASSOCIATED EQUIPMENT ON PROPOSED POLE.
- INSTALL ELECTRICAL, TELCO AND CABLE ROUTING AS NECESSARY.

| SHT. NO. | DESCRIPTION | REV NO | REVISION DATE |
|---|---|---|---|
| T-1 | TITLE SHEET | 0 | 4/14/23 |
| GN-1 | GENERAL NOTES | 0 | 4/14/23 |
| AD-1 | ADJOINERS PLAN | 0 | 4/14/23 |
| C-1 | SITE PLAN & EQUIPMENT PLAN | 0 | 4/14/23 |
| C-2 | POLE ELEVATION & DETAIL | 0 | 4/14/23 |
| C-3 | POLE MOUNT DETAILS | 0 | 4/14/23 |

## SHEET INDEX

THIS SET OF PLANS SHALL NOT BE UTILIZED AS CONSTRUCTION DOCUMENTS UNTIL ALL ITEMS OF CONCERN HAVE BEEN ADDRESSED AND EACH OF THE DRAWINGS HAS BEEN REVISED AND ISSUED "FOR CONSTRUCTION".

## UTILITY PROVIDERS

| | |
|---|---|
| ELECTRIC PROVIDER: | CHG&E |
| ESR #: | TBD |
| PLANNER: | TBD |
| PHONE: | (XXX) XXX-XXXX |
| FIBER: | VERIZON |

Before You Dig, Drill Or Blast!

Dig Safely. New York

UNDERGROUND FACILITIES PROTECTIVE ORGANIZATION

CALL US TOLL FREE 1-800-962-7962

NY industrial code rule 753 requires no less than two working days notice, but not more than ten days notice.

DIG SAFELY – NEW YORK

## DO NOT SCALE DRAWINGS

THESE DRAWINGS ARE FORMATTED FOR 22"x34" FULL SIZE AND 11"x17" HALF SIZE. OTHER SIZED VERSIONS ARE NOT PRINTED TO THE SCALE SHOWN. CONTRACTOR SHALL VERIFY ALL PLANS, EXISTING DIMENSIONS & CONDITIONS ON THE JOB SITE & SHALL IMMEDIATELY NOTIFY THE ENGINEER IN WRITING OF ANY DISCREPANCIES BEFORE PROCEEDING WITH THE WORK OR BE RESPONSIBLE FOR SAME.


verizon
1275 JOHN STREET, SUITE 100
WEST HENRIETTA, NY 14586

Tectonic
PRACTICAL SOLUTIONS. EXCEPTIONAL SERVICE.
Tectonic Engineering Consultants, Geologists & Land Surveyors, D.P.C.
Project Contact Info
36 British American Blvd.
Suite 101
Latham, NY 12110
Phone: (518) 783-1630
(800) 829-6531
www.tectonicengineering.com


| WO NUMBER | DRAWN BY | REVIEWED BY |
|---|---|---|
| 11861.002 | TRR | LP |

| NO. | DATE | ISSUE |
|---|---|---|
| 0 | 4/14/23 | FOR COMMENT |

| RELEASED BY | DATE |
|---|---|
| | |



0 1
ORIGINAL SIZE IN INCHES
(22x34 FORMAT)

0 1
ORIGINAL SIZE IN INCHES
(11x17 FORMAT)

SITE INFORMATION

SPOOK HILL PARK MICRO
RE PN: 20222384944
LC: 729798

SITE ADDRESS

UTILITY POLE# TBD
ADJ TO 15 NANCY ALEEN DR
TOWN OF WAPPINGER
DUTCHESS COUNTY
NY 12590

SHEET TITLE

TITLE SHEET

SHEET NUMBER

T-1

## ELECTRICAL NOTES

1. ALL ELECTRICAL WORK SHALL BE PERFORMED IN ACCORDANCE WITH THE PROJECT SPECIFICATIONS, NEC AND ALL APPLICABLE LOCAL CODES.
2. ALL ELECTRICAL EQUIPMENT AND ACCESSORIES SHALL BE U.L. APPROVED OR LISTED.
3. CONDUIT ROUTINGS ARE SCHEMATIC. CONTRACTOR SHALL INSTALL CONDUITS SO THAT ACCESS TO EQUIPMENT IS NOT BLOCKED.
4. WIRING, RACEWAY AND SUPPORT METHODS AND MATERIALS SHALL COMPLY WITH THE REQUIREMENTS OF THE NEC.
5. ALL CIRCUITS SHALL BE SEGREGATED AND MAINTAIN MINIMUM CABLE SEPARATION AS REQUIRED BY THE NEC.
6. EACH END OF EVERY POWER, POWER PHASE CONDUCTOR (I.E., HOTS), GROUNDING, AND T1 CONDUCTOR AND CABLE SHALL BE LABELED WITH COLOR-CODED INSULATION OR ELECTRICAL TAPE (3M BRAND, 1/2 INCH PLASTIC ELECTRICAL TAPE WITH UV PROTECTION, OR EQUAL). THE IDENTIFICATION METHOD SHALL CONFORM WITH NEC & OSHA.
7. ALL ELECTRICAL COMPONENTS SHALL BE CLEARLY LABELED. ALL EQUIPMENT SHALL BE LABELED WITH THEIR VOLTAGE RATING, POWER OR AMPACITY RATING, AND BRANCH CIRCUIT ID NUMBERS (I.E., PANELBOARD AND CIRCUIT ID'S).
8. PANELBOARDS (ID NUMBERS) AND INTERNAL CIRCUIT BREAKERS (CIRCUIT ID NUMBERS) SHALL BE CLEARLY LABELED.
9. POWER, CONTROL, AND EQUIPMENT GROUND WIRING IN TUBING OR CONDUIT SHALL BE SINGLE CONDUCTOR (#14 AWG OR LARGER), 600 V, OIL RESISTANT THHN OR THWN-2, STRANDED COPPER CABLE RATED FOR 90°C (WET AND DRY) OPERATION; LISTED OR LABELED FOR THE LOCATION AND RACEWAY SYSTEM USED, UNLESS OTHERWISE SPECIFIED.
10. SUPPLEMENTAL EQUIPMENT GROUND WIRING LOCATED INDOORS SHALL BE SINGLE CONDUCTOR (#6 AWG OR LARGER), 600 V, OIL RESISTANT THHN OR THWN-2 GREEN INSULATION, STRANDED COPPER CABLE RATED FOR 90°C (WET AND DRY) OPERATION; LISTED OR LABELED FOR THE LOCATION AND RACEWAY SYSTEM USED, UNLESS OTHERWISE SPECIFIED.
11. POWER AND CONTROL WIRING, NOT IN TUBING OR CONDUIT, SHALL BE MULTI-CONDUCTOR, TYPE USE-2 CABLE (#14 AWG OR LARGER), 600 V, OIL RESISTANT RHW-2 OR XHHW-2, STRANDED COPPER CABLE RATED FOR 90°C (WET AND DRY) OPERATION; WITH OUTER JACKET; LISTED OR LABELED FOR THE LOCATION USED, UNLESS OTHERWISE SPECIFIED.
12. ALL POWER AND GROUNDING CONNECTIONS SHALL BE CRIMP-STYLE, COMPRESSION WIRE LUGS AND WIRE NUTS BY THOMAS AND BETTS (OR EQUAL). LUGS AND WIRE NUTS SHALL BE RATED FOR OPERATION AT NO LESS THAN 90°C.
13. ELECTRICAL METALLIC TUBING (EMT) OR RIGID METALLIC CONDUIT (RMC) SHALL BE USED FOR EXPOSED OR CONCEALED LOCATIONS.
14. ALL OUTDOOR EXPOSED CONDUIT SHALL BE PVC SCHEDULE 80 AND SHALL BE SUPPORTED ADEQUATELY.
15. LIQUID-TIGHT FLEXIBLE METALLIC CONDUIT (LIQUID-TITE FLEX) SHALL BE USED OUTDOORS, WHERE VIBRATION OCCURS OR FLEXIBILITY IS NEEDED. LFMC SHALL CONFORM TO NEC ARTICLE 350.
16. CONDUIT AND TUBING FITTINGS SHALL BE THREADED OR COMPRESSION-TYPE AND APPROVED FOR THE LOCATION USED. SET SCREW FITTINGS ARE NOT ACCEPTABLE.
17. CABINETS, BOXES, AND WIREWAYS SHALL BE LISTED OR LABELED FOR ELECTRICAL USE IN ACCORDANCE WITH NEMA, UL, ANSI/IEEE, AND NEC.
18. EQUIPMENT CABINETS, TERMINAL BOXES, JUNCTION BOXES, AND PULL BOXES SHALL BE GALVANIZED OR EPOXY-COATED SHEET STEEL, SHALL MEET OR EXCEED UL 50, AND RATED NEMA 3R (OR BETTER) OUTDOORS.
19. IF REQUIRED, CONTRACTOR SHALL APPLY FOR ELECTRICAL SERVICE AS SOON AS POSSIBLE AND COORDINATE REQUIREMENTS, SERVICE ROUTING, AND METER SOCKET TYPE WITH LOCAL POWER COMPANY.
20. CONTRACTOR SHALL OBTAIN ALL PERMITS, PAY PERMIT FEES, AND SCHEDULE INSPECTIONS.
21. CONTRACTOR SHALL LABEL ELECTRICAL EQUIPMENT IN ACCORDANCE WITH NEC 110.16 AND 110.24.
22. CONTRACTOR SHALL VERIFY THAT THE MAIN BONDING JUMPER AND GROUNDING ELECTRODE CONDUCTOR IS INSTALLED PROPERLY AT SERVICE ENTRANCE.
23. WHERE ELECTRICAL POWER IS TO BE SUB-FED FROM AN EXISTING DISTRIBUTION SYSTEM, THE FOLLOWING SHALL APPLY:
    A. CONTRACTOR SHALL PERFORM LOAD TESTING TO DETERMINE MAXIMUM FEEDER DEMAND PER N.E.C. ARTICLE 220.
    B. CONTRACTOR SHALL VERIFY WHETHER EXISTING FEEDER CAPACITY EXCEEDS VALUE CALCULATED PER N.E.C. ARTICLE 220.
    C. EACH BRANCH CIRCUIT PROTECTIVE DEVICE SHALL HAVE SAME INTERRUPTING RATING AS EQUIPMENT SUPPLYING IT.
    D. PREFERRED MEANS OF SUPPLY SHALL BE A BRANCH CIRCUIT PROTECTIVE DEVICE LOCATED IN EXISTING PANEL.

## ANTENNA MOUNTING NOTES

1. DESIGN AND CONSTRUCTION OF ANTENNA SUPPORTS SHALL CONFORM TO ANSI/TIA-222-H-2017 "STRUCTURAL STANDARD FOR ANTENNA SUPPORTING STRUCTURES, ANTENNAS AND SMALL WIND TURBINE SUPPORT STRUCTURES". THE BUILDING CODE OF NEW YORK STATE, AND ALL OTHER APPLICABLE LOCAL, STATE, AND FEDERAL CODES.
2. ALL STEEL MATERIALS SHALL BE GALVANIZED AFTER FABRICATION IN ACCORDANCE WITH ASTM A123 "ZINC (HOT-DIP GALVANIZED) COATINGS ON IRON AND STEEL PRODUCTS", UNLESS OTHERWISE NOTED.
3. ALL BOLTS, ANCHORS AND MISCELLANEOUS HARDWARE SHALL BE GALVANIZED IN ACCORDANCE WITH ASTM A153 "ZINC-COATING (HOT-DIP) ON IRON AND STEEL HARDWARE", UNLESS OTHERWISE NOTED.
4. DAMAGED GALVANIZED SURFACES SHALL BE REPAIRED BY COLD GALVANIZING IN ACCORDANCE WITH ASTM A780 "REPAIR OF DAMAGED AND UNCOATED AREAS OF HOT-DIP GALVANIZED COATINGS", USING COLD GALVANIZING COMPOUND AS MANUFACTURED BY ZINGA-USA OR ZINC KOTE, OR ENGINEER APPROVED EQUAL WITH A MINIMUM METALLIC ZINC CONTENT OF 95% BY WEIGHT IN DRY FILM. DRY FINISHED COATING THICKNESS SHALL BE 3 MILS MINIMUM.
5. ALL ANTENNA MOUNTS SHALL BE INSTALLED WITH DOUBLE NUTS AND SHALL BE INSTALLED IN ACCORDANCE WITH MANUFACTURER'S SPECIFICATIONS.
6. DESIGN OF THE ANTENNA MOUNTING BRACKETS, SUPPORTS, AND ALL COMPONENTS THEREOF AND ATTACHMENT THERETO SHALL BE THE RESPONSIBILITY OF THE MANUFACTURER. MANUFACTURER SHALL PROVIDE THE OWNER DRAWINGS DETAILING ALL COMPONENTS OF THE ASSEMBLY, INCLUDING CONNECTIONS, DESIGN LOADS, AND ALL OTHER PERTINENT DATA. MANUFACTURER SHALL ALSO PROVIDE THE OWNER WITH A STATEMENT OF COMPLIANCE, INDICATING THAT THE ANTENNA SUPPORTS HAVE BEEN DESIGNED IN ACCORDANCE WITH ANSI/TIA-222-H STANDARDS. ALL SUBMISSIONS SHALL BEAR THE SIGNATURE AND SEAL OF A PROFESSIONAL ENGINEER LICENSED IN THE STATE OF NEW YORK.

## STRUCTURAL NOTE

1. THE VERIFICATION OF STRUCTURAL ADEQUACY AND DESIGN OF THE ATTACHMENTS MUST BE PERFORMED, PRIOR TO THE COMMENCEMENT OF CONSTRUCTION, BY A PROFESSIONAL ENGINEER LICENSED IN THE STATE OF NEW YORK.
2. REFER TO STRUCTURAL ANALYSIS REPORT PREPARED BY TECTONIC ENGINEERING CONSULTANTS, GEOLOGISTS & LAND SURVEYORS, D.P.C DATED 4/14/23.

## GROUNDING NOTES

GROUND TESTING AFTER CONSTRUCTION:

1. AFTER COMPLETION OF CONSTRUCTION OF THE CELL SITE GROUND SYSTEM, A POST INSTALLATION CLAMP-ON RESISTANCE TEST WILL BE PERFORMED BY THE CONTRACTOR AS REQUIRED BY NEC AND PROVIDED TO VERIZON WIRELESS. A SINGLE ROD, PIPE, OR PLATE ELECTRODE SHALL BE SUPPLEMENTED BY AN ADDITIONAL ELECTRODE OF A TYPE SPECIFIED IN 250.53(A)(2) THROUGH (A)(8). THE SUPPLEMENTAL ELECTRODE SHALL BE PERMITTED TO BE BONDED TO ONE OF THE FOLLOWING:
   A. ROD, PIPE OR PLATE ELECTRODE
   B. GROUNDING ELECTRODE CONDUCTOR

   IF A SINGLE ROD, PIPE, OR PLATE GROUNDING ELECTRODE HAS A RESISTANCE TO EARTH OF 25 OHMS OR LESS, THE SUPPLEMENTAL ELECTRODE SHALL NOT BE REQUIRED. GROUNDING TEST SHALL BE TAKEN BEFORE A/C POWER, NEUTRAL/GROUND BOND IS CONNECTED.
2. USE OF 90° BENDS IN THE PROTECTION GROUNDING CONDUCTORS SHALL BE AVOIDED WHEN 45° BENDS CAN BE ADEQUATELY SUPPORTED. ALL BENDS SHALL BE MADE WITH 12" RADIUS OR LARGER.
3. APPROVED ANTIOXIDANT COATINGS (I.E. CONDUCTIVE GEL OR PASTE) SHALL BE USED ON ALL COMPRESSION AND BOLTED GROUND CONNECTIONS. ANTI-OXIDATION CONDUCTIVE COMPOUNDS ARE REQUIRED ON ALL GROUND CONNECTIONS. NO OX-ID (COSMOLINE GREASE BASED COMPOUND) SHALL BE USED FOR COPPER TO COPPER CONNECTIONS. ZINC BASED COMPOUND (GREY COLORED) OR APPROVED EQUAL SHALL BE USED FOR COPPER TO STEEL CONNECTIONS.
4. ALL LUG CONNECTIONS & THEIR MATING SURFACES SHALL BE CLEANED AND COATED WITH THE APPROPRIATE ANTI-OXIDIZING CONDUCTIVE COMPOUND. IF A LUG CONNECTION IS TO BE SECURED DIRECTLY TO A PAINTED SURFACE, THE PAINT SHALL BE REMOVED TO REVEAL BARE METAL AROUND THE AREA OF THE CONNECTION AND COATED WITH AN APPROPRIATE ANTI-OXIDATION CONDUCTIVE COMPOUNDS.
5. THE POST INSTALLATION GROUND RESISTANCE TEST REPORT AND THE THIRD PARTY ELECTRICAL INSPECTION CERTIFICATION SHALL BE PROVIDED TO THE CITY OF SCHENECTADY ELECTRICAL INSPECTOR.
6. SURGE PROTECTORS ARE NOT APPLICABLE TO THIS DESIGN.

## GENERAL NOTES

1. ALL WORK SHALL CONFORM TO THE REQUIREMENTS OF THE NEW YORK STATE BUILDING CODE, AND ALL OTHER APPLICABLE CODES AND ORDINANCES.
2. CONTRACTOR SHALL VISIT THE JOB SITE AND FAMILIARIZE HIMSELF WITH ALL CONDITIONS AFFECTING THE PROPOSED WORK AND MAKE PROVISIONS AS TO THE COST THEREOF. CONTRACTOR SHALL BE RESPONSIBLE FOR FAMILIARIZING HIMSELF WITH ALL CONTRACT DOCUMENTS, FIELD CONDITIONS AND DIMENSIONS AND CONFIRMING THAT THE WORK MAY BE ACCOMPLISHED AS SHOWN PRIOR TO PROCEEDING WITH CONSTRUCTION. ANY DISCREPANCIES SHALL BE BROUGHT TO THE ATTENTION OF THE ENGINEER PRIOR TO THE COMMENCEMENT OF WORK.
3. PLANS ARE NOT TO BE SCALED. THESE PLANS ARE INTENDED TO BE A DIAGRAMMATIC OUTLINE ONLY, UNLESS OTHERWISE NOTED. THE WORK SHALL INCLUDE FURNISHING MATERIALS, EQUIPMENT, APPURTENANCES, AND LABOR NECESSARY TO EFFECT ALL INSTALLATIONS AS INDICATED ON THE DRAWINGS.
4. DIMENSIONS SHOWN ARE TO FINISH SURFACES, UNLESS OTHERWISE NOTED. SPACING BETWEEN EQUIPMENT IS REQUIRED CLEARANCE. THEREFORE, IT IS CRITICAL TO FIELD VERIFY DIMENSIONS. SHOULD THERE BE ANY QUESTIONS REGARDING THE CONTRACT DOCUMENTS, EXISTING CONDITIONS AND/OR DESIGN INTENT, THE CONTRACTOR SHALL BE RESPONSIBLE FOR OBTAINING A CLARIFICATION FROM THE CARRIER'S AUTHORIZED REPRESENTATIVE OR THE ENGINEER PRIOR TO PROCEEDING WITH THE WORK.
5. DETAILS ARE INTENDED TO SHOW END RESULT OF DESIGN. MINOR MODIFICATIONS MAY BE REQUIRED TO SUIT JOB DIMENSIONS OR CONDITIONS, AND SUCH MODIFICATIONS SHALL BE INCLUDED AS PART OF THE WORK.
6. CONTRACTOR SHALL RECEIVE CLARIFICATION IN WRITING, AND SHALL RECEIVE IN WRITING AUTHORIZATION TO PROCEED BEFORE STARTING WORK ON ANY ITEMS NOT CLEARLY DEFINED OR IDENTIFIED BY THE CONTRACT DOCUMENTS.
7. CONTRACTOR SHALL NOTIFY THE CONSTRUCTION MANAGER OF ALL PRODUCTS OR ITEMS NOTED AS "EXISTING" WHICH ARE NOT FOUND TO BE IN THE FIELD.
8. CONTRACTOR SHALL SUPERVISE AND DIRECT THE WORK USING THE BEST CONSTRUCTION SKILLS AND ATTENTION. CONTRACTOR SHALL BE SOLELY RESPONSIBLE FOR CONSTRUCTION MEANS, METHODS, TECHNIQUES, SEQUENCES, PROCEDURES, AND FOR COORDINATING ALL PORTIONS OF THE WORK UNDER CONTRACT, UNLESS OTHERWISE NOTED.
9. ERECTION SHALL BE DONE IN A WORKMANLIKE MANNER BY COMPETENT EXPERIENCED WORKMEN IN ACCORDANCE WITH APPLICABLE CODES AND THE BEST ACCEPTED PRACTICE. ALL MEMBERS SHALL BE LAID PLUMB AND TRUE AS INDICATED ON THE DRAWINGS.
10. CONTRACTOR SHALL BE RESPONSIBLE FOR THE SAFETY OF THE WORK AREA, AND ADJACENT AREAS, THAT ARE LIKELY TO BE AFFECTED BY THE WORK UNDER THIS CONTRACT. WORK SHALL CONFORM TO ALL OSHA REQUIREMENTS.
11. CONTRACTOR SHALL COORDINATE HIS WORK AND SCHEDULE HIS ACTIVITIES AND WORKING HOURS IN ACCORDANCE WITH THE REQUIREMENTS OF THE OWNER.
12. CONTRACTOR SHALL BE RESPONSIBLE FOR COORDINATING HIS WORK WITH THE WORK OF OTHERS AS IT MAY RELATE TO RADIO EQUIPMENT, ANTENNAS AND ANY OTHER PORTIONS OF THE WORK.
13. CONTRACTOR SHALL MAINTAIN LIABILITY INSURANCE TO PROTECT THE OWNER AND CARRIER.
14. INSTALL ALL EQUIPMENT AND MATERIALS IN ACCORDANCE WITH MANUFACTURER'S RECOMMENDATIONS UNLESS SPECIFICALLY INDICATED OR WHERE LOCAL CODES OR REGULATIONS TAKE PRECEDENCE.
15. MAKE NECESSARY PROVISIONS TO PROTECT EXISTING SURFACES, EQUIPMENT, IMPROVEMENTS, PIPING, ANTENNA AND ANTENNA CABLES. REPAIR ANY DAMAGE THAT OCCURS DURING CONSTRUCTION.
16. REPAIR ALL EXISTING SURFACES DAMAGED DURING CONSTRUCTION SUCH THAT THEY MATCH AND BLEND WITH ADJACENT SURFACES.
17. KEEP CONTRACT AREA CLEAN, HAZARD FREE, AND DISPOSE OF ALL DEBRIS AND RUBBISH. EQUIPMENT NOT SPECIFIED AS REMAINING ON THE PROPERTY OF THE OWNER SHALL BE REMOVED. LEAVE PREMISES IN CLEAN CONDITION AND FREE FROM PAINT SPOTS, DUST, OR SMUDGES OF ANY NATURE. CONTRACTOR SHALL BE RESPONSIBLE FOR MAINTAINING ALL ITEMS UNTIL COMPLETION OF CONSTRUCTION.
18. CONTRACTOR SHALL VERIFY ALL DIMENSIONS AND CONDITIONS IN THE FIELD PRIOR TO FABRICATION AND ERECTION OF ANY MATERIAL. ANY UNUSUAL CONDITIONS SHALL BE REPORTED TO THE ATTENTION OF THE ENGINEER.
19. CONTRACTOR SHALL SECURE ALL NECESSARY BUILDING PERMITS AND INSPECTIONS AND PAY ALL REQUIRED FEES.
20. PROVIDE A PORTABLE FIRE EXTINGUISHER WITH A RATING OF NOT LESS THAN 2-A OR 2-A/10-BC WITHIN 75 FEET TRAVEL DISTANCE TO ALL PORTIONS OF THE BUILDOUT AREA DURING CONSTRUCTION.
21. ALL BROCHURES, OPERATING AND MAINTENANCE MANUALS, CATALOGS, SHOP DRAWINGS AND OTHER DOCUMENTATION SHALL BE TURNED OVER TO CARRIER AT COMPLETION OF CONSTRUCTION.
22. COMPLETE JOB SHALL BE GUARANTEED FOR A PERIOD OF ONE (1) YEAR AFTER THE DATE OF ACCEPTANCE BY CARRIER. ANY WORK, MATERIALS, OR EQUIPMENT FOUND TO BE DEFECTIVE DURING THAT PERIOD SHALL BE CORRECTED IMMEDIATELY UPON WRITTEN NOTIFICATION AT NO ADDITIONAL COST TO CARRIER.
23. RIGGING OPERATIONS SHALL BE DONE IN ACCORDANCE WITH STATE AND FEDERAL SAFETY REGULATIONS (OSHA). ENGINEER, CARRIER AND THE OWNER SHALL BE HELD HARMLESS IN THE EVENT THE CONTRACTOR DOES NOT FOLLOW SUCH SAFETY REGULATIONS.
24. CONTRACTOR SHALL PROVIDE ACCESS TO THE SITE AND ASSIST THE RADIO EQUIPMENT VENDOR AND THE ANTENNA INSTALLATION CONTRACTOR AS THEY MAY REQUIRE.


verizon

1275 JOHN STREET, SUITE 100
WEST HENRIETTA, NY 14586

Tectonic
PRACTICAL SOLUTIONS. EXCEPTIONAL SERVICE.
Tectonic Engineering Consultants, Geologists & Land Surveyors, D.P.C.
Project Contact Info
36 British American Blvd.
Suite 101
Latham, NY 12110
Phone: (518) 783-1630
(800) 829-6531
www.tectonicengineering.com


| WO NUMBER | DRAWN BY | REVIEWED BY |
|---|---|---|
| 11861.002 | TRR | LP |

| NO. | DATE | ISSUE |
|---|---|---|
| 0 | 4/14/23 | FOR COMMENT |

| RELEASED BY | DATE |
|---|---|
| | |



0 1
ORIGINAL SIZE IN INCHES
(22x34 FORMAT)

0 1
ORIGINAL SIZE IN INCHES
(11x17 FORMAT)

SITE INFORMATION

SPOOK HILL PARK MICRO
RE PN: 20222384944
LC: 729798

SITE ADDRESS

UTILITY POLE# TBD
ADJ TO 15 NANCY ALEEN DR
TOWN OF WAPPINGER
DUTCHESS COUNTY
NY 12590

SHEET TITLE

GENERAL NOTES

SHEET NUMBER

GN-1

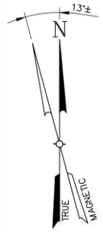


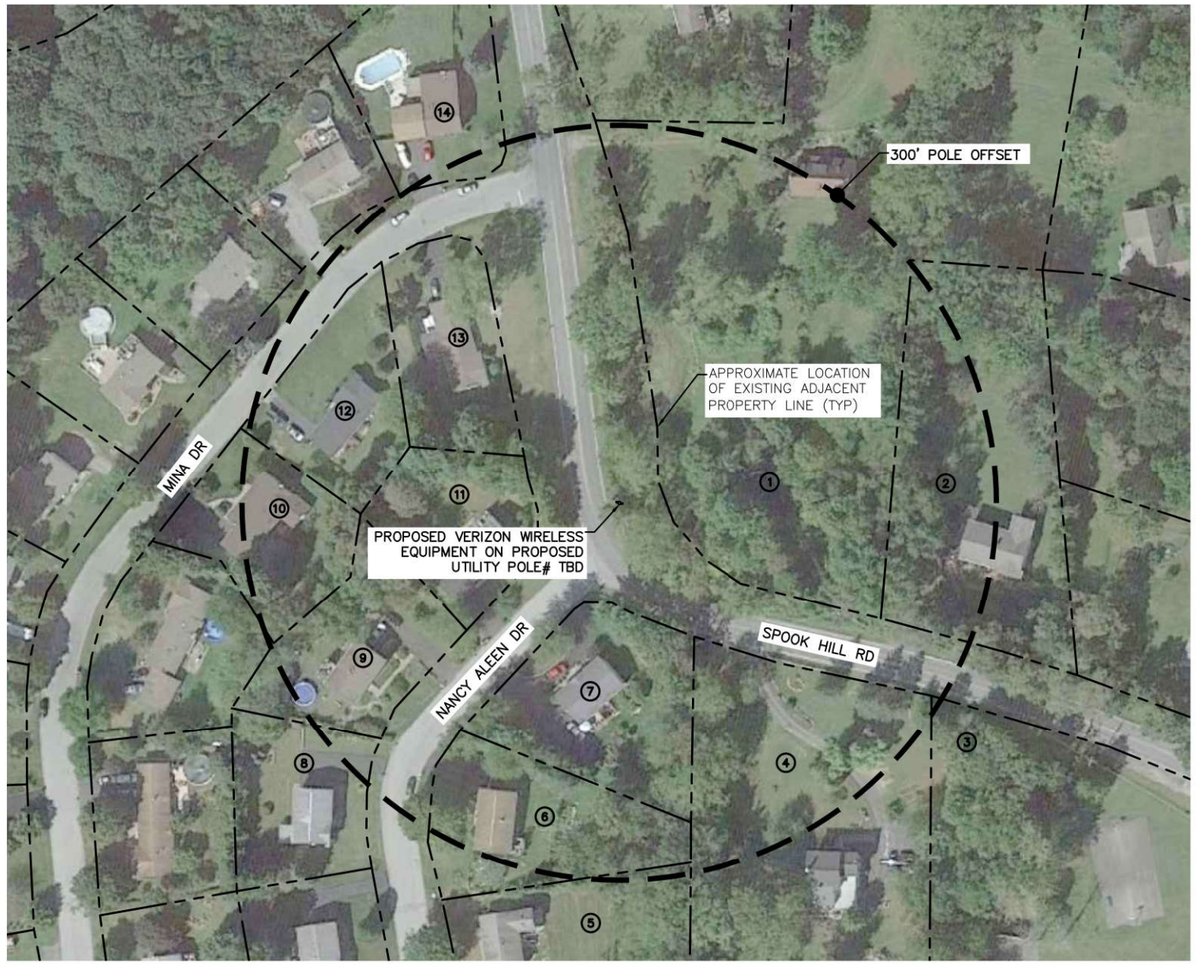


NOTE:

1. THE PROPERTY LINES HEREON ARE APPROXIMATE BASED ON GIS DATA AND ARE FOR ORIENTATION PURPOSES ONLY. THEY DO NOT REPRESENT A PROPERTY/BOUNDARY DECISION BY A LAND SURVEYOR.

1 AD-1 ADJOINERS PLAN

SCALE: 1" = 100' (11x17 SIZE)
1" = 50' (22x34 SIZE)

| ID | PARCEL # | OWNER_F | OWNER_L | STREET # | ADDRESS | ST_SUFF | CITY | STATE | ZIP |
|---|---|---|---|---|---|---|---|---|---|
| 1 | 135689-6257-01-028878 | Jason Edward | Engstrom | 21 | Spook Hill | Rd | Wappinger Falls | NY | 12590 |
| 2 | 135689-6257-01-038855 | Stanton | Weibman | 31 | Spook Hill | Rd | Wappinger Falls | NY | 12590 |
| 3 | 135689-6257-01-048807 | Town Of Wappinger | | 20 | Middlebush | Rd | Wappinger Falls | NY | 12590 |
| 4 | 135689-6257-01-022810 | Thomas | Liber | 34 | Spook Hill | Rd | Wappinger Falls | NY | 12590 |
| 5 | 135689-6257-01-004817 | Thomas | Andriello | 14 | Nancy Aleen | Dr | Wappingers Falls | NY | 12590 |
| 6 | 135689-6257-01-002826 | Jian Dong | Wu | 16 | Nancy Aleen | Dr | Wappingers Falls | NY | 12590 |
| 7 | 135689-6257-01-007836 | Theresa | Capogna | 18 | Nancy Aleen | Dr | Wappinger Falls | NY | 12590 |
| 8 | 135689-6157-02-981828 | Josephine | Russell | 11 | Nancy Aleen | Dr | Wappinger Falls | NY | 12590 |
| 9 | 135689-6157-02-986840 | Victor | Vazquez | 13 | Nancy Aleen | Dr | Wappingers Falls | NY | 12590 |
| 10 | 135689-6157-02-978849 | Victor | Margiotta | 5 | Mina | Dr | Wappingers Falls | NY | 12590 |
| 11 | 135689-6157-02-995850 | Martin | Baily | 15 | Nancy Aleen | Dr | Wappingers Falls | NY | 12590 |
| 12 | 135689-6157-02-985860 | Daniel | Whalen | 3 | Mina | Dr | Wappingers Falls | NY | 12590 |
| 13 | 135689-6157-02-994864 | Kwok Fai | Eng | 1 | Mina | Dr | Wappinger Falls | NY | 12590 |
| 14 | 135689-6157-02-992886 | AnnaMaria | Leonetti | 2 | Mina | Dr | Wappingers Falls | NY | 12590 |

2 AD-1 ADJOINERS LIST

SCALE: NTS

verizon

1275 JOHN STREET, SUITE 100
WEST HENRIETTA, NY 14586

Tectonic
PRACTICAL SOLUTIONS. EXCEPTIONAL SERVICE.
Tectonic Engineering Consultants, Geologists & Land Surveyors, D.P.C.
Project Contact Info
36 British American Blvd.
Suite 101
Latham, NY 12110
Phone: (518) 783-1630
(800) 829-6531
www.tectonicengineering.com

| WO NUMBER | DRAWN BY | REVIEWED BY |
|---|---|---|
| 11861.002 | TRR | LP |

| NO. | DATE | ISSUE |
|---|---|---|
| 0 | 4/14/23 | FOR COMMENT |

| RELEASED BY | DATE |
|---|---|
| | |



0 1
ORIGINAL SIZE IN INCHES
(22x34 FORMAT)

0 1
ORIGINAL SIZE IN INCHES
(11x17 FORMAT)

SITE INFORMATION

SPOOK HILL PARK MICRO
RE PN: 20222384944
LC: 729798

SITE ADDRESS

UTILITY POLE# TBD
ADJ TO 15 NANCY ALEEN DR
TOWN OF WAPPINGER
DUTCHESS COUNTY
NY 12590

SHEET TITLE

ADJOINERS PLAN

SHEET NUMBER

AD-1

## NORTH ORIENTATION

1. NORTH ORIENTATION ESTABLISHED BY COMPASS OBSERVATION.

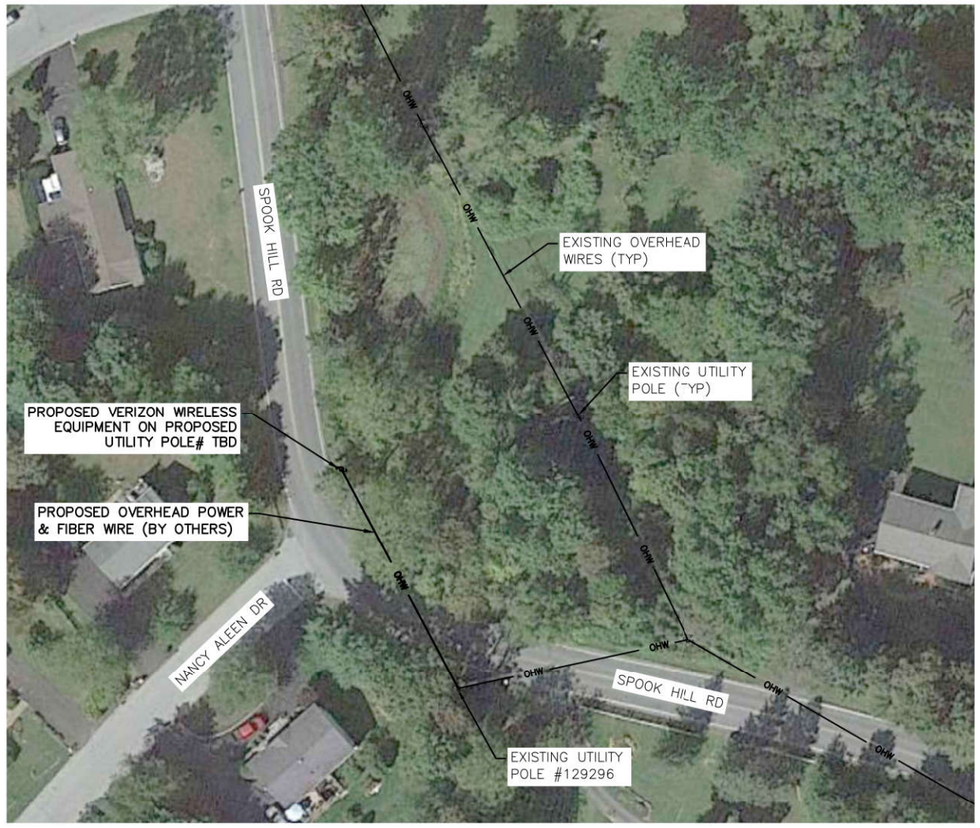


NOTE:
SITE INFORMATION BASED ON A SITE VISIT PERFORMED BY TECTONIC ENGINEERING CONSULTANTS, GEOLOGISTS & LAND SURVEYORS D.P.C., ON 1/13/23.

1 / C-1 SITE PLAN
SCALE: 1" = 80' (11x17 SIZE)
1" = 40' (22x34 SIZE)

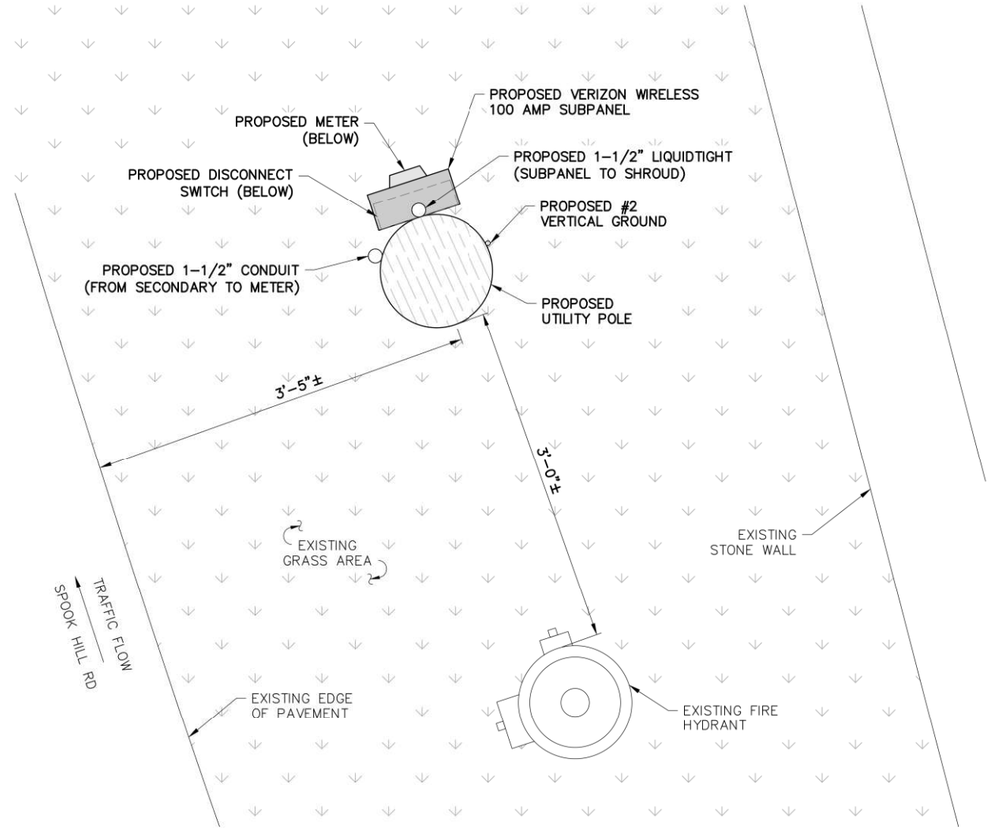


2 / C-1 EQUIPMENT PLAN
SCALE: 3" = 1'-0" (11x17 SIZE)
1-1/2" = 1'-0" (22x34 SIZE)

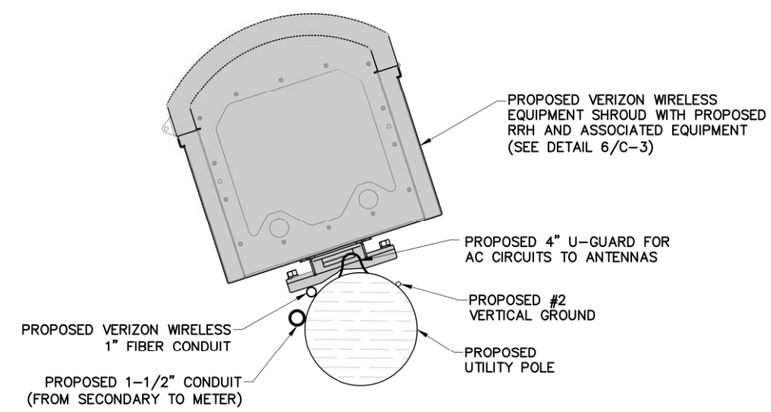


3 / C-1 SHROUD PLAN VIEW
SCALE: 3" = 1'-0" (11x17 SIZE)
1-1/2" = 1'-0" (22x34 SIZE)

verizon
1275 JOHN STREET, SUITE 100
WEST HENRIETTA, NY 14586

Tectonic
PRACTICAL SOLUTIONS. EXCEPTIONAL SERVICE.
Tectonic Engineering Consultants, Geologists & Land Surveyors, D.P.C.
Project Contact Info
36 British American Blvd. Suite 101 Latham, NY 12110
Phone: (518) 783-1630 (800) 829-6531
www.tectonicengineering.com

| WO NUMBER | DRAWN BY | REVIEWED BY |
|---|---|---|
| 11861.002 | TRR | LP |

| NO. | DATE | ISSUE |
|---|---|---|
| 0 | 4/14/23 | FOR COMMENT |

| RELEASED BY | DATE |
|---|---|
| | |



0 1
ORIGINAL SIZE IN INCHES (22x34 FORMAT)
0 1
ORIGINAL SIZE IN INCHES (11x17 FORMAT)

SITE INFORMATION
SPOOK HILL PARK MICRO
RE PN: 20222384944
LC: 729798

SITE ADDRESS
UTILITY POLE# TBD
ADJ TO 15 NANCY ALEEN DR
TOWN OF WAPPINGER
DUTCHESS COUNTY
NY 12590

SHEET TITLE
SITE PLAN & EQUIPMENT PLAN

SHEET NUMBER
C-1

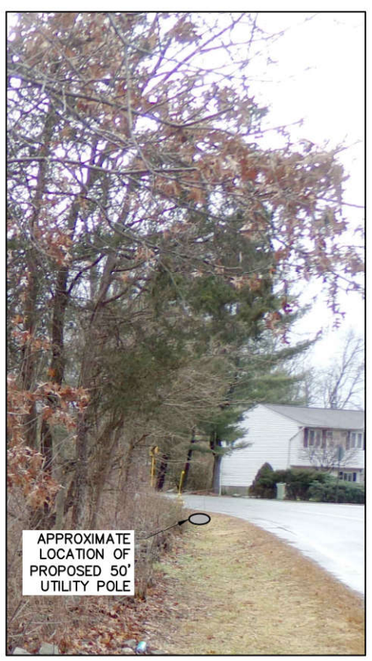


1 C-2 PROPOSED POLE PHOTO

SCALE: NTS

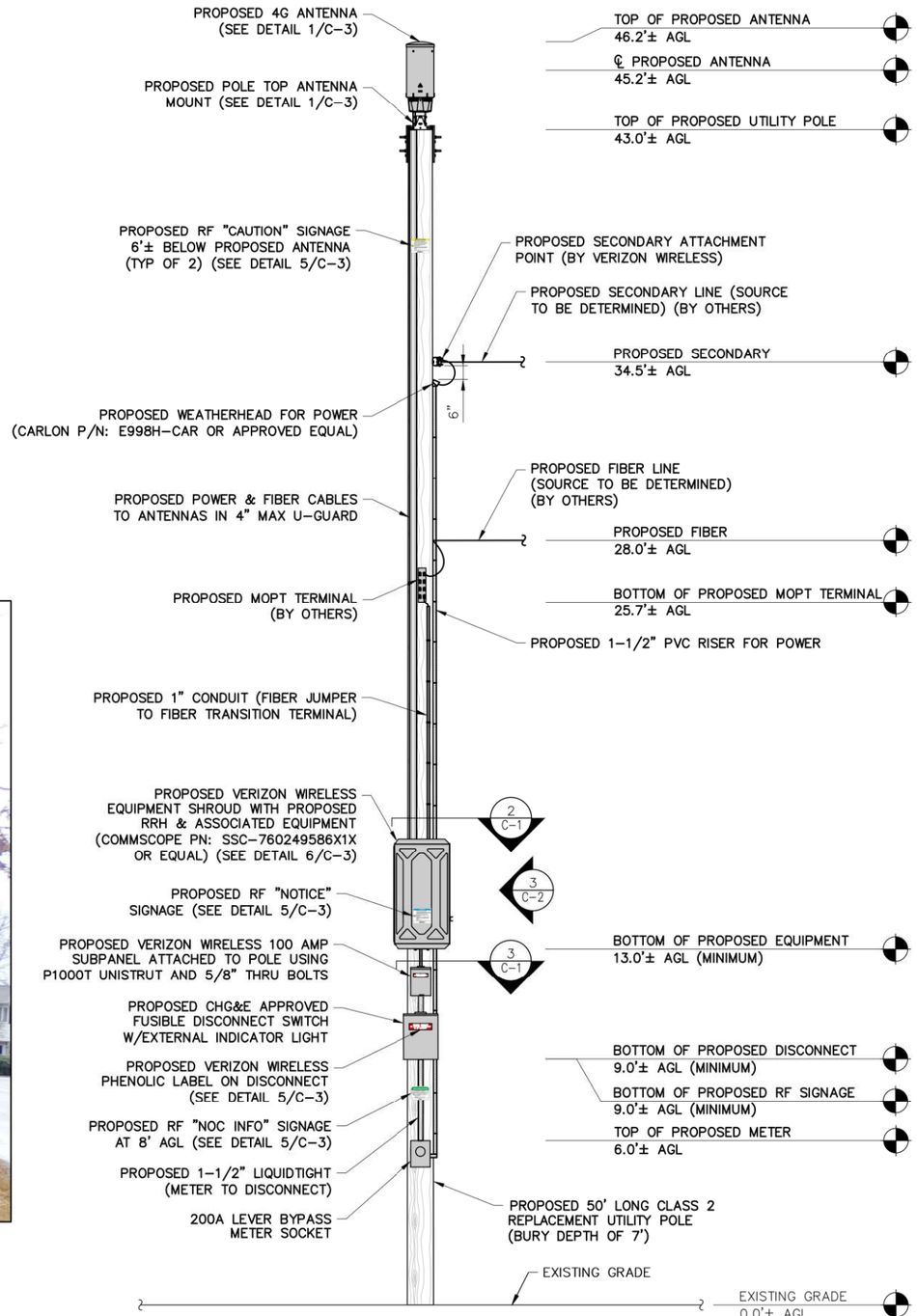


2 C-2 UTILITY POLE ELEVATION

SCALE: 3/16" = 1'-0" (11x17 SIZE)
3/8" = 1'-0" (22x34 SIZE)

NOTE:
USE OF SCHEDULE 40/80 CONDUIT OR RIGID CONDUIT SHALL BE DETERMINED BY THE UTILITY PROVIDERS REQUIREMENTS.

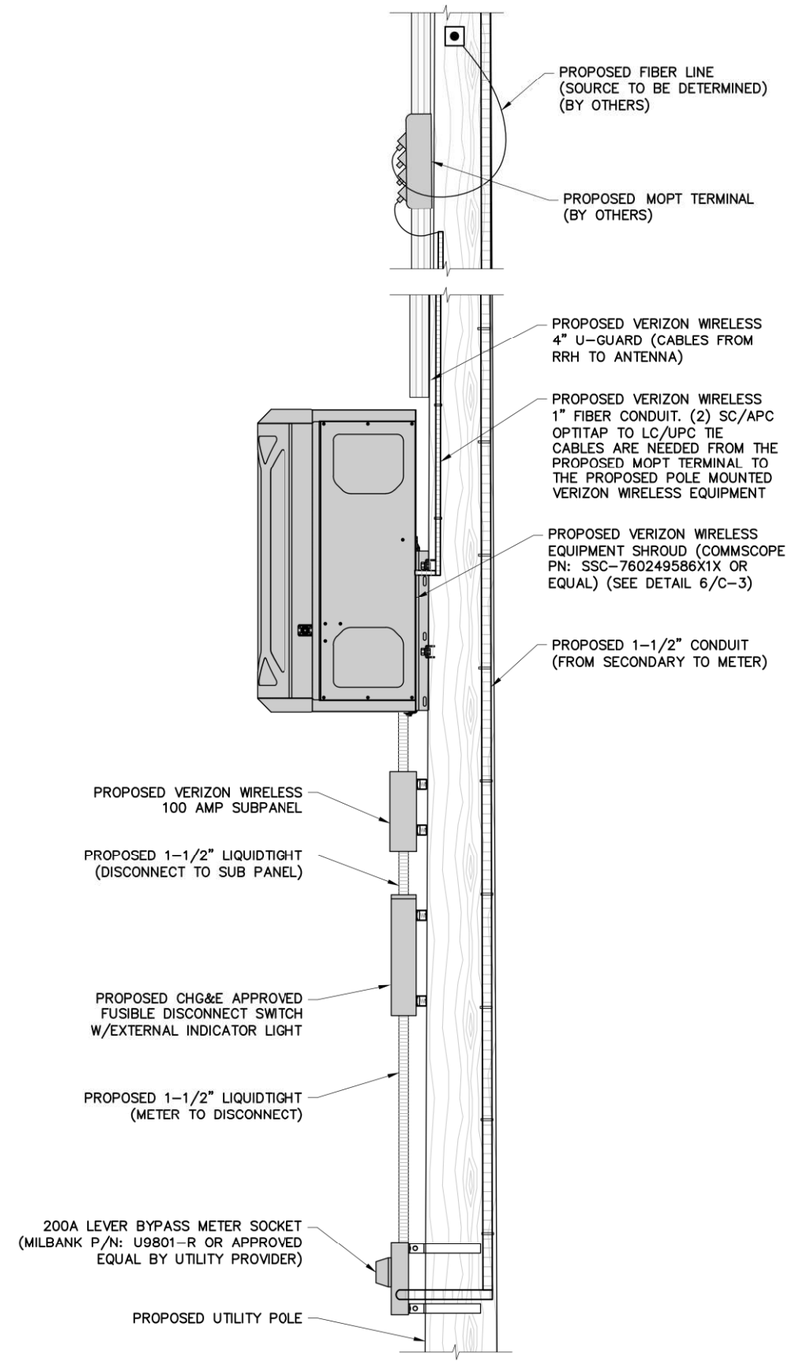


3 C-2 ELEVATION DETAIL

SCALE: 2" = 1'-0" (11x17 SIZE)
1" = 1'-0" (22x34 SIZE)

verizon
1275 JOHN STREET, SUITE 100
WEST HENRIETTA, NY 14586

Tectonic
PRACTICAL SOLUTIONS. EXCEPTIONAL SERVICE.
Tectonic Engineering Consultants, Geologists & Land Surveyors, D.P.C.
Project Contact Info
36 British American Blvd. Suite 101 Latham, NY 12110
Phone: (518) 783-1630 (800) 829-6531
www.tectonicengineering.com

| WO NUMBER | DRAWN BY | REVIEWED BY |
|---|---|---|
| 11861.002 | TRR | LP |

| NO. | DATE | ISSUE |
|---|---|---|
| 0 | 4/14/23 | FOR COMMENT |

| RELEASED BY | DATE |
|---|---|
| | |



0 1
ORIGINAL SIZE IN INCHES (22x34 FORMAT)

0 1
ORIGINAL SIZE IN INCHES (11x17 FORMAT)

SITE INFORMATION

SPOOK HILL PARK MICRO
RE PN: 20222384944
LC: 729798

SITE ADDRESS

UTILITY POLE# TBD
ADJ TO 15 NANCY ALEEN DR
TOWN OF WAPPINGER
DUTCHESS COUNTY
NY 12590

SHEET TITLE

POLE ELEVATION & DETAIL

SHEET NUMBER

C-2

NOTE:
USE OF SCHEDULE 40/80 CONDUIT OR RIGID CONDUIT SHALL BE DETERMINED BY THE UTILITY PROVIDERS REQUIREMENTS.

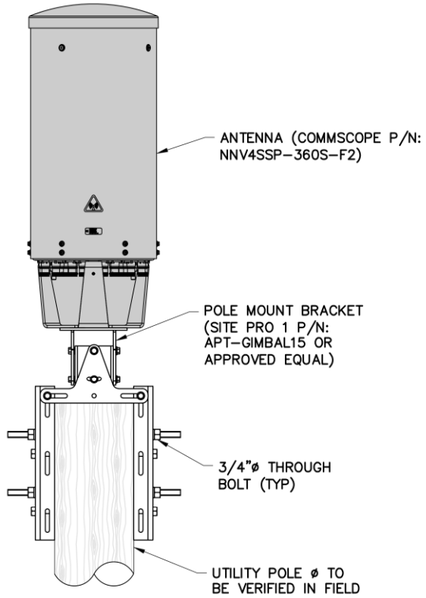


1 C-3 POLE-TOP ANTENNA MOUNTING
SCALE: NTS

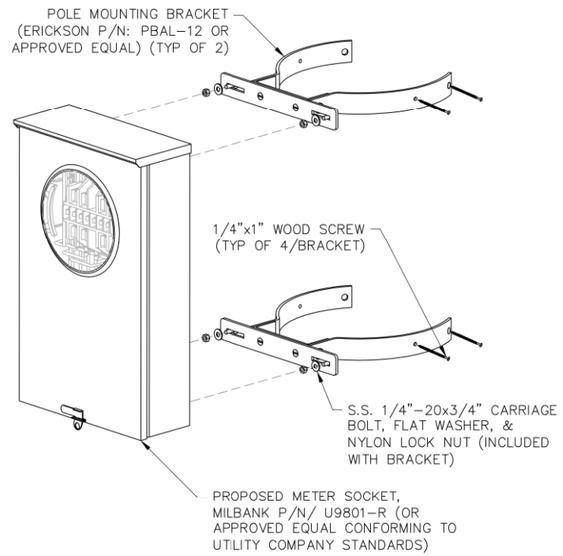


2 C-3 METER MOUNTING DETAIL
SCALE: NTS

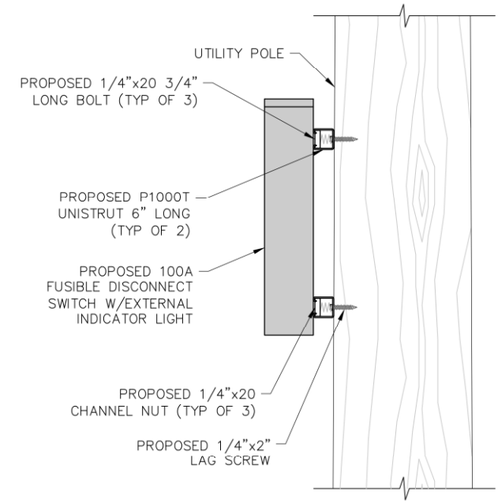


3 C-3 DISCONNECT MOUNTING DETAIL
SCALE: 4" = 1'-0" (11x17 SIZE)
2" = 1'-0" (22x34 SIZE)

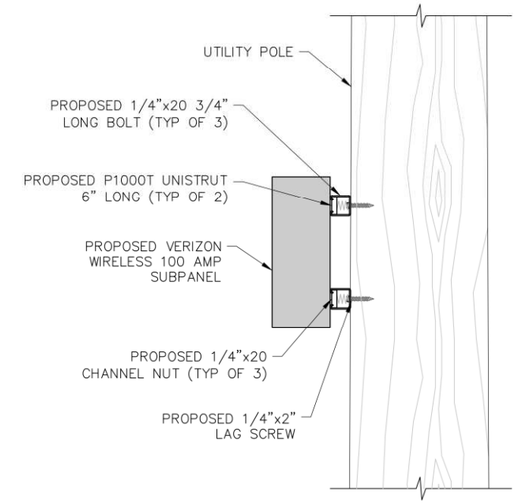


4 C-3 SUBPANEL MOUNTING DETAIL
SCALE: 4" = 1'-0" (11x17 SIZE)
2" = 1'-0" (22x34 SIZE)

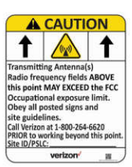


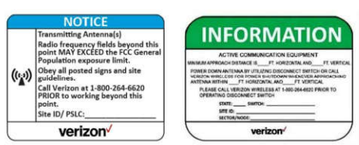


VERIZON WIRELESS
AC SERVICE DISCONNECT
& RF SHUTOFF

NOTE:

1. CONTRACTOR TO FURNISH AND INSTALL PHENOLIC LABEL APPLIED TO LOAD CENTER.
2. ATTACH RF "NOTICE" AND "INFORMATION" SIGNAGE TO FACE OF UTILITY POLE USING 1" WOOD SCREWS.
3. RF SIGNS ARE APPROXIMATELY 6"x7.5" IN SIZE.

5 C-3 PROPOSED SIGNAGE
SCALE: NTS

## Metro Cell Solutions

COMMSCOPE®

### SSC-760249586X1X

### MV2 Micro Radio Concealment Enclosure

Universal Single Part Number Radio Enclosure

**Introduction**

One pole mounted Radio Enclosure for all your radio configurations under a single part number

- Highly configurable – supports varying configurations with a universal mounting solution
- Aesthetically curved front
- Accepts Radios for:
  - Ericsson SSC-760249586E1X
  - Nokia SSC-760249586N1X
  - Samsung radios SSC-760249586S1X

**Application**

The radio concealment enclosure is designed to conceal small cell radios and be mounted to existing metal, concrete and wood pole structures as well as pole replacements where low-visual impact is desired.

- Unique, universal internal mounting system
- Can be kitted with Rectifiers, Raycap, CommScope diplexers and jumpers

System Dimensioning & Configuration

| | |
|---|---|
| Height / Width / Depth / Volume | 48 in. (1219.2 mm) / 24 in. (609.6 mm) / 26 in (660.4 mm) 17.3 cu ft. |
| System Weight | 70lbs. (32kg) with no radio equipment installed.<br>Approx. 279lbs (127kg) fully loaded* (max)<br>*weight varies on configuration |
| Min. / Max. Acceptable Pole Diameter (With Included Mounting kit) | 2.5in-8.5 in. Dia by clamping (Larger diameter poles by steel banding)<br>Up to 12in Dia Wood Pole with included 5/8" threaded rod for through bolting |
| Finish | UV-resistant powder coat; Various color options available.<br>"1" for Light Grey, "2" for Green, "3" for Black, "4" for Brown,"6" for Fairfax Brown, "8" Federal Park Brown, "9" for Metallic Silver, "W" for White |
| Power/Fiber Input Conduit | Back: (2) 2" Trade Size Knockouts.<br>Bot: (2) 2" Trade Size Knockouts<br>Top: (2) 2" Trade Size Knockouts |

MC-SP-RE-20-003-02



## Metro Cell Solutions

COMMSCOPE®

**RadioCompatibility**

**SSC-760249586X1X**

**Ericsson Configurations "SSC-760249586E1X"**

- (2) RRU11/RRU32/2212/4415/4426/4478 & (2) PSU AC 02/08 units
- (1) 8843 or 4449 Dual Band RRU & (2) PSU AC 02/08 units
- (1) 8843 and (1) 4478 & (3) PSU AC 02/08 units
- (1) 4415, (1) 4449 and (1) 220x/440x & (3) PSU AC 02/08 units
- (1) 4455 and (1) 4449 & (3) PSU AC 02/08 units
- (1) 4449 and (2) 220x/440x & (2) PSU AC 02/08 units
- Up to (6) 2203/2205/2208 or 4402/4408 radios
- (1) 4415 or 4426 radio and (1) 220x/440x & (1) PSU AC 02/08

**Please see CommScope representative for additional configurations**

**Samsung Configurations "SSC-760249586S1X"**

- (1) AWS PCS 320W dual band radio, (1) RT4401-48A CBRS radio, (1) RT2201-46A LAA radio, (1) Delta 2.0kW DC rectifier, (1) SDX1926Q-43/SDX1926T-43

**Please see CommScope representative for additional configurations**

**Nokia Configurations "SSC-760249586N1X"**

- (2) Dual Band 160W and/or 320W and/or Tri Band 370W Radios with Associated Rectifiers
  - Supported Dual or Tri Band Radios:
    - AHFIA
    - AHFIB
    - AHFIC
    - AHLBA
    - AHBCA
    - AHBCC
    - AHLBSA
  - Supported Rectifiers:
    - Delta
    - GE
    - CCI
    - Nokia FPAE
- (4) AirScale Micro radios

**Please see CommScope representative for additional configurations**

**Notes:**

- Enclosure accommodate the following RayCap models:
  - RSCAC-6533-P-120-D, RSCAC-9457-HP-120-D or, RSCAC-1333-PH-240
- Enclosure can accommodate CommScope Diplexer model SDX1926Q-43
- Enclosure can accommodate Delta 1.0kW, 1.8kW or 2.0kW rectifiers, or CCI rectifiers or GE rectifiers or Nokia FPAE rectifiers. Please see CommScope representative for details
- "X" denotes color: "1" for Light Grey, "2" for Green, "3" for Black, "4" for Brown, "6" for Fairfax Brown, "8" Federal Park Brown, "9" for Metallic Silver, "W" for White

MC-SP-RE-20-003-02



6 C-3 EQUIPMENT SHROUD DETAILS
SCALE: NTS

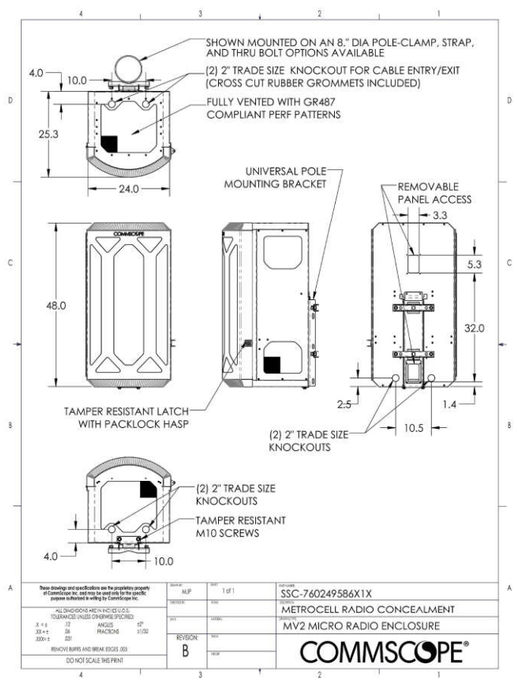


verizon

1275 JOHN STREET, SUITE 100
WEST HENRIETTA, NY 14586

Tectonic
PRACTICAL SOLUTIONS. EXCEPTIONAL SERVICE.
Tectonic Engineering Consultants, Geologists & Land Surveyors, D.P.C.
Project Contact Info
36 British American Blvd. Suite 101 Latham, NY 12110
Phone: (518) 783-1630 (800) 829-6531
www.tectonicengineering.com

| WO NUMBER | DRAWN BY | REVIEWED BY |
|---|---|---|
| 11861.002 | TRR | LP |

| NO. | DATE | ISSUE |
|---|---|---|
| 0 | 4/14/23 | FOR COMMENT |

| RELEASED BY | DATE |
|---|---|
| | |



0 1
ORIGINAL SIZE IN INCHES (22x34 FORMAT)
0 1
ORIGINAL SIZE IN INCHES (11x17 FORMAT)

SITE INFORMATION

SPOOK HILL PARK MICRO
RE PN: 20222384944
LC: 729798

SITE ADDRESS

UTILITY POLE# TBD
ADJ TO 15 NANCY ALEEN DR
TOWN OF WAPPINGER
DUTCHESS COUNTY
NY 12590

SHEET TITLE

POLE MOUNT DETAILS

SHEET NUMBER

C-3

**DOCUMENTATION OF PUBLIC UTILITY STATUS**
**and**
**OVERVIEW OF ROSENBERG DECISION**

In *Cellular Tel. Co. v. Rosenberg*, 82 N.Y.2d 364 (1993), the New York Court of Appeals determined that cellular telephone companies are public utilities. The Court held that proposed cellular telephone installations are to be reviewed by zoning boards pursuant to the traditional standard afforded to public utilities, rather than the standards generally required for the necessary approvals:

> It has long been held that a zoning board may not exclude a utility from a community where the utility has shown a need for its facilities. There can be no question of [the carrier's] need to erect the cell site to eliminate service gaps in its cellular telephone service area. The proposed cell site will also improve the transmission and reception of existing service. Application of our holding in *Matter of Consolidated Edison* to sitings of cellular telephone companies, such as [the applicant], permits those companies to construct structures necessary for their operation which are prohibited because of existing zoning laws and to provide the desired services to the surrounding community. . . . Moreover, the record supports the conclusion that [the applicant] sustained its burden of proving the requisite public necessity. [The applicant] established that the erection of the cell site would enable it to remedy gaps in its service area that currently prevent it from providing adequate service to its customers in the . . . area.

*Rosenberg*, 82 N.Y.2d at 372-74 (citing *Consolidated Edison Co. v. Hoffman*, 43 N.Y.2d 598 (1978)).

This special treatment of a public utility stems from the essential nature of its service, and the fact that a public utility transmitting facility must be located in a particular area in order to provide service. For instance, water towers, electric switching stations, water pumping stations and telephone poles must be in particular locations (including within residential districts) in order to provide the utility to a specific area:

> [Public] utility services are needed in all districts; the service can be provided only if certain facilities (for example, substations) can be located in commercial and even in residential districts. To exclude such use would result in an impairment of an essential service.

Anderson, New York Zoning Law Practice, 3d ed., p. 411 (1984) (hereafter "Anderson"). See also, *Cellular Tel. Co. v. Rosenberg*, 82 N.Y.2d 364 (1993); *Payne v. Taylor*, 178 A.D.2d 979 (4th Dep't 1991).

Accordingly, the law in New York is that a municipality may not prohibit facilities, including towers, necessary for the transmission of a public utility. In *Rosenberg*, 82 N.Y.2d at 371, the court found that "the construction of an antenna tower... to facilitate the supply of cellular telephone service is a 'public utility building' within the meaning of a zoning ordinance." See also *Long Island Lighting Co. v. Griffin*, 272 A.D. 551 (2d Dep't 1947) (a municipal corporation may not prohibit the expansion of a public utility where such expansion is necessary to the maintenance of essential services).

In the present case, Verizon Wireless does not have reliable service capacity in the Town. The communications facility proposed is necessary to remedy this service problem and to provide adequate and reliable wireless telecommunications service coverage to this area. Therefore, Verizon Wireless satisfies the requisite showing of need for the facility under applicable New York law.

**DOCUMENTATION OF PERSONAL WIRELESS SERVICE FACILITY STATUS**
**and**
**FEDERAL TELECOMMUNICATIONS ACT OF 1996**

In addition to being considered a public utility under New York decisional law, Verizon Wireless is classified as a provider of "personal wireless services" under the federal Telecommunications Act of 1996 (the "TCA").

As stated in the long title of the Act, the goal of the TCA is to "promote competition and reduce regulation in order to secure lower prices and higher quality services for American telecommunications consumers and encourage the rapid deployment of new telecommunications technologies." *Telecommunications Act of 1996, Pub. LA. No. 104-104, 110 Stat. 56 (1996).*

The TCA mandates a process designed to achieve competitive telecommunications markets. In keeping with the central goals of the TCA, the authors specify in Section 253(a) that "[n]o State or local statute or regulation…may prohibit or have the effect of prohibiting the ability of <u>any</u> entity to provide <u>any</u> interstate or intrastate telecommunications service." *TCA Section 253(a), emphasis added*.

Section 332(c) of the TCA preserves the authority of a State or local government or instrumentality thereof over decisions regarding the placement, construction and modification of personal wireless service facilities, subject to several important limitations:

- the "regulation of the placement…of personal wireless service facilities by any State or local government or instrumentality thereof shall not unreasonably discriminate among providers of functionally equivalent services" (*TCA §332(c)(7)(B)(i)(I)*);

- the "regulation of the placement…of personal wireless service facilities by any State or local government or instrumentality thereof shall not prohibit or have the effect of prohibiting the provision of personal wireless services" (*TCA §332(c)(7)(B)(i)(II)*);

- Applications must be processed within a reasonable period of time, and any decision to deny a request for placement of personal wireless service facilities must be in writing and supported by substantial evidence contained in a written record (*TCA §§332(c)(7)(B)(ii) and (iii)*); and

- regulations based upon the perceived environmental effects of radio frequency emissions are prohibited, so long as the proposed personal wireless service facility complies with FCC regulations concerning such emissions (*TCA §332(c)(7)(B)(iv)*).

A reference copy of the Telecommunications Act of 1996 is included herewith.

104TH CONGRESS 2d Session } HOUSE OF REPRESENTATIVES { REPORT 104–458

# TELECOMMUNICATIONS ACT OF 1996

JANUARY 31, 1996. Ordered to be printed

Mr. BLILEY, from the committee of conference, submitted the following

## CONFERENCE REPORT

[To accompany S. 652]

The committee of conference on the disagreeing votes of the two Houses on the amendments of the House to the bill (S. 652), to provide for a pro-competitive, de-regulatory national policy framework designed to accelerate rapidly private sector deployment of advanced telecommunications and information technologies and services to all Americans by opening all telecommunications markets to competition, and for other purposes, having met, after full and free conference, have agreed to recommend and do recommend to their respective Houses as follows:

That the Senate recede from its disagreement to the amendment of the House to the text of the bill and agree to the same with an amendment as follows:

In lieu of the matter proposed to be inserted by the House amendment, insert the following:

***SECTION 1. SHORT TITLE; REFERENCES.***

*(a) SHORT TITLE.—This Act may be cited as the "Telecommunications Act of 1996".*

*(b) REFERENCES.—Except as otherwise expressly provided, whenever in this Act an amendment or repeal is expressed in terms of an amendment to, or repeal of, a section or other provision, the reference shall be considered to be made to a section or other provision of the Communications Act of 1934 (47 U.S.C. 151 et seq.).*

***SEC. 2. TABLE OF CONTENTS.***

*The table of contents for this Act is as follows:*

*Sec. 1. Short title; references.*
*Sec. 2. Table of contents.*
*Sec. 3. Definitions.*

22–327

[redacted]
*tity that has obtained an attachment to such conduit or right-of-way so that such entity may have a reasonable opportunity to add to or modify its existing attachment. Any entity that adds to or modifies its existing attachment after receiving such notification shall bear a proportionate share of the costs incurred by the owner in making such pole, duct, conduit, or right-of-way accessible.*

[redacted]
*right-of-way shall not be required to bear any of the costs of rearranging or replacement of its attachment, if such rearrangement or replacement is required as a result of an additional attachment or the modification of an existing attachment sought by any other entity* [redacted]

***SEC. 704. FACILITIES SITING; RADIO FREQUENCY EMISSION STANDARDS.***

*(a) NATIONAL WIRELESS TELECOMMUNICATIONS SITING POLICY.—Section 332(c) (47 U.S.C. 332(c)) is amended by adding at the end the following new paragraph:*

*"(7) PRESERVATION OF LOCAL ZONING AUTHORITY.—*

*"(A) GENERAL AUTHORITY.—Except as provided in this paragraph, nothing in this Act shall limit or affect the authority of a State or local government or instrumentality thereof over decisions regarding the placement, construction, and modification of personal wireless service facilities.*

*"(B) LIMITATIONS.—*

*"(i) The regulation of the placement, construction, and modification of personal wireless service facilities by any State or local government or instrumentality thereof—*

*"(I) shall not unreasonably discriminate among providers of functionally equivalent services; and*

*"(II) shall not prohibit or have the effect of prohibiting the provision of personal wireless services.*

*"(ii) A State or local government or instrumentality thereof shall act on any request for authorization to place, construct, or modify personal wireless service facilities within a reasonable period of time after the request is duly filed with such government or instrumentality, taking into account the nature and scope of such request.*

*"(iii) Any decision by a State or local government or instrumentality thereof to deny a request to place, construct, or modify personal wireless service facilities shall be in writing and supported by substantial evidence contained in a written record.*

*"(iv) No State or local government or instrumentality thereof may regulate the placement, construction, and modification of personal wireless service facilities on the basis of the environmental effects of radio frequency emissions to the extent that such facilities comply with the Commission's regulations concerning such emissions.*

*"(v) Any person adversely affected by any final action or failure to act by a State or local government or any instrumentality thereof that is inconsistent with this subparagraph may, within 30 days after such action or failure to act, commence an action in any court of competent jurisdiction. The court shall hear and decide such action on an expedited basis. Any person adversely affected by an act or failure to act by a State or local government or any instrumentality thereof that is inconsistent with clause (iv) may petition the Commission for relief.*

*"(C) DEFINITIONS.—For purposes of this paragraph—*

*"(i) the term 'personal wireless services' means commercial mobile services, unlicensed wireless services, and common carrier wireless exchange access services;*

*"(ii) the term 'personal wireless service facilities' means facilities for the provision of personal wireless services; and*

*"(iii) the term 'unlicensed wireless service' means the offering of telecommunications services using duly authorized devices which do not require individual licenses, but does not mean the provision of direct-to-home satellite services (as defined in section 303(v)).".*

*(b) RADIO FREQUENCY EMISSIONS.—Within 180 days after the enactment of this Act, the Commission shall complete action in ET Docket 93–62 to prescribe and make effective rules regarding the environmental effects of radio frequency emissions.*

*(c) AVAILABILITY OF PROPERTY.—Within 180 days of the enactment of this Act, the President or his designee shall prescribe procedures by which Federal departments and agencies may make available on a fair, reasonable, and nondiscriminatory basis, property, rights-of-way, and easements under their control for the placement of new telecommunications services that are dependent, in whole or in part, upon the utilization of Federal spectrum rights for the transmission or reception of such services. These procedures may establish a presumption that requests for the use of property, rights-of-way, and easements by duly authorized providers should be granted absent unavoidable direct conflict with the department or agency's mission, or the current or planned use of the property, rights-of-way, and easements in question. Reasonable fees may be charged to providers of such telecommunications services for use of property, rights-of-way, and easements. The Commission shall provide technical support to States to encourage them to make property, rights-of-way, and easements under their jurisdiction available for such purposes.*

***SEC. 703. MOBILE SERVICE DIRECT ACCESS TO LONG DISTANCE CARRIERS.***

*Section 332(c) (47 U.S.C. 332(c)) is amended by adding at the end the following new paragraph:*

*"(8) MOBILE SERVICES ACCESS.—A person engaged in the provision of commercial mobile services, insofar as such person is so engaged, shall not be required to provide equal access to common carriers for the provision of telephone toll service.".*

portionate share of the costs incurred by the owner in making such conduit or right-of-way accessible.

*Conference agreement*

The conference agreement adopts the Senate provision with modifications. The conference agreement amends section 224 of the Communications Act by adding new subsection (e)(1) to allow parties to negotiate the rates, terms, and conditions for attaching to poles, ducts, conduits, and rights-of-way owned or controlled by utilities. New subsection 224(e)(2) establishes a new rate formula charged to telecommunications carriers for the non-useable space of each pole. Such rate shall be based upon the number of attaching entities. The conferees also agree to three additional provisions from the House amendment. First, subsection (g) requires utilities that engage in the provision of telecommunications services or cable services to impute to its costs of providing such service an equal amount to the pole attachment rate for which such company would be liable under section 224. Second, new subsection 224(h) requires utilities to provide written notification to attaching entities of any plans to modify or alter its poles, ducts, conduit, or rights-of-way. New subsection 224(h) also requires any attaching entity that takes advantage of such opportunity to modify its own attachments shall bear a proportionate share of the costs of such alterations. Third, new subsection 224(i) prevents a utility from imposing the cost of rearrangements to other attaching entities if done solely for the benefit of the utility.

SECTION 704—FACILITIES SITING; RADIO FREQUENCY EMISSION STANDARDS

*Senate bill*

No provision.

*House amendment*

Section 108 of the House amendment required the Commission to issue regulations within 180 days of enactment for siting of CMS. A negotiated rulemaking committee comprised of State and local governments, public safety agencies and the affected industries were to have attempted to develop a uniform policy to propose to the Commission for the siting of wireless tower sites.

The House amendment also required the Commission to complete its pending Radio Frequency (RF) emission exposure standards within 180 days of enactment. The siting of facilities could not be denied on the basis of RF emission levels for facilities that were in compliance with the Commission standard.

The House amendment also required that to the greatest extent possible the Federal government make available to use of Federal property, rights-of-way, easements and any other physical instruments in the siting of wireless telecommunications facilities.

*Conference agreement*

The conference agreement creates a new section 704 which prevents Commission preemption of local and State land use decisions and preserves the authority of State and local governments over

zoning and land use matters except in the limited circumstances set forth in the conference agreement. The conference agreement also provides a mechanism for judicial relief from zoning decisions that fail to comply with the provisions of this section. It is the intent of the conferees that other than under section 332(c)(7)(B)(iv) of the Communications Act of 1934 as amended by this Act and section 704 of the Telecommunications Act of 1996 the courts shall have exclusive jurisdiction over all other disputes arising under this section. Any pending Commission rulemaking concerning the preemption of local zoning authority over the placement, construction or modification of CMS facilities should be terminated.

When utilizing the term "functionally equivalent services" the conferees are referring only to personal wireless services as defined in this section that directly compete against one another. The intent of the conferees is to ensure that a State or local government does not in making a decision regarding the placement, construction and modification of facilities of personal wireless services described in this section unreasonably favor one competitor over another. The conferees also intend that the phrase "unreasonably discriminate among providers of functionally equivalent services" will provide localities with the flexibility to treat facilities that create different visual, aesthetic, or safety concerns differently to the extent permitted under generally applicable zoning requirements even if those facilities provide functionally equivalent services. For example, the conferees do not intend that if a State or local government grants a permit in a commercial district, it must also grant a permit for a competitor's 50-foot tower in a residential district.

Actions taken by State or local governments shall not prohibit or have the effect of prohibiting the placement, construction or modification of personal wireless services. It is the intent of this section that bans or policies that have the effect of banning personal wireless services or facilities not be allowed and that decisions be made on a case-by-case basis.

Under subsection (c)(7)(B)(ii), decisions are to be rendered in a reasonable period of time, taking into account the nature and scope of each request. If a request for placement of a personal wireless service facility involves a zoning variance or a public hearing or comment process, the time period for rendering a decision will be the usual period under such circumstances. It is not the intent of this provision to give preferential treatment to the personal wireless service industry in the processing of requests, or to subject their requests to any but the generally applicable time frames for zoning decision.

The phrase "substantial evidence contained in a written record" is the traditional standard used for judicial review of agency actions.

The conferees intend section 332(c)(7)(B)(iv) to prevent a State or local government or its instrumentalities from basing the regulation of the placement, construction or modification of CMS facilities directly or indirectly on the environmental effects of radio frequency emissions if those facilities comply with the Commission's regulations adopted pursuant to section 704(b) concerning such emissions.

The limitations on the role and powers of the Commission under this subparagraph relate to local land use regulations and are not intended to limit or affect the Commission's general authority over radio telecommunications, including the authority to regulate the construction, modification and operation of radio facilities.

The conferees intend that the court to which a party appeals a decision under section 332(c)(7)(B)(v) may be the Federal district court in which the facilities are located or a State court of competent jurisdiction, at the option of the party making the appeal, and that the courts act expeditiously in deciding such cases. The term "final action" of that new subparagraph means final administrative action at the State or local government level so that a party can commence action under the subparagraph rather than waiting for the exhaustion of any independent State court remedy otherwise required.

With respect to the availability of Federal property for the use of wireless telecommunications infrastructure sites under section 704(c), the conferees generally adopt the House provisions, but substitute the President or his designee for the Commission.

It should be noted that the provisions relating to telecommunications facilities are not limited to commercial mobile radio licensees, but also will include other Commission licensed wireless common carriers such as point to point microwave in the extremely high frequency portion of the electromagnetic spectrum which rely on line of sight for transmitting communication services.

## SECTION 705—MOBILE SERVICE DIRECT ACCESS TO LONG DISTANCE CARRIERS

*Senate bill*

Subsection (b) of section 221 of the Senate bill, as passed, states that notwithstanding the MFJ or any other consent decree, no CMS provider will be required by court order or otherwise to provide long distance equal access. The Commission may only order equal access if a CMS provider is subject to the interconnection obligations of section 251 and if the Commission finds that such a requirement is in the public interest. CMS providers shall ensure that its subscribers can obtain unblocked access to the interexchange carrier of their choice through the use of interexchange carrier identification codes, except that the unblocking requirement shall not apply to mobile satellite services unless the Commission finds it is in the public interest.

*House amendment*

Under section 109 of the House amendment, the Commission shall require providers of two-way switched voice CMS to allow their subscribers to access the telephone toll services provider of their choice through the use of carrier identification codes. The Commission rules will supersede the equal access, balloting and prescription requirements imposed by the MFJ and the AT&T-McCaw consent decree. The Commission may exempt carriers or classes of carriers from the requirements of this section if it is consistent with the public interest, convenience, and necessity, and the

# Federal Communications Commission

## Wireless Telecommunications Bureau

## RADIO STATION AUTHORIZATION

LICENSEE: CELLCO PARTNERSHIP

ATTN: REGULATORY
CELLCO PARTNERSHIP
5055 NORTH POINT PKWY, NP2NE NETWORK ENGINEERING
ALPHARETTA, GA 30022

| Call Sign | File Number |
|---|---|
| WQJQ689 | |
| Radio Service | |
| WU - 700 MHz Upper Band (Block C) | |

**FCC Registration Number (FRN):** 0003290673

| Grant Date | Effective Date | Expiration Date | Print Date |
|---|---|---|---|
| 09-11-2019 | 07-15-2020 | 06-13-2029 | |

| Market Number | Channel Block | Sub-Market Designator |
|---|---|---|
| REA001 | C | 0 |

| Market Name |
|---|
| Northeast |

| 1st Build-out Date | 2nd Build-out Date | 3rd Build-out Date | 4th Build-out Date |
|---|---|---|---|
| 06-13-2013 | 06-13-2019 | | |

**Waivers/Conditions:**

If the facilities authorized herein are used to provide broadcast operations, whether exclusively or in combination with other services, the licensee must seek renewal of the license either within eight years from the commencement of the broadcast service or within the term of the license had the broadcast service not been provided, whichever period is shorter in length. See 47 CFR §27.13(b).

This authorization is conditioned upon compliance with section 27.16 of the Commission's rules

**Conditions:**
Pursuant to §309(h) of the Communications Act of 1934, as amended, 47 U.S.C. §309(h), this license is subject to the following conditions: This license shall not vest in the licensee any right to operate the station nor any right in the use of the frequencies designated in the license beyond the term thereof nor in any other manner than authorized herein. Neither the license nor the right granted thereunder shall be assigned or otherwise transferred in violation of the Communications Act of 1934, as amended. See 47 U.S.C. § 310(d). This license is subject in terms to the right of use or control conferred by §706 of the Communications Act of 1934, as amended. See 47 U.S.C. §606.

This license may not authorize operation throughout the entire geographic area or spectrum identified on the hardcopy version. To view the specific geographic area and spectrum authorized by this license, refer to the Spectrum and Market Area information under the Market Tab of the license record in the Universal Licensing System (ULS). To view the license record, go to the ULS homepage at http://wireless.fcc.gov/uls/index.htm?job=home and select "License Search". Follow the instructions on how to search for license information.

**Licensee Name:** CELLCO PARTNERSHIP

**Call Sign:** WQJQ689 **File Number:** **Print Date:**

**700 MHz Relicensed Area Information:**

| Market | Market Name | Buildout Deadline | Buildout Notification | Status |
|---|---|---|---|---|

# Federal Communications Commission
## Wireless Telecommunications Bureau

## RADIO STATION AUTHORIZATION

LICENSEE: VERIZON WIRELESS OF THE EAST LP

ATTN: REGULATORY
VERIZON WIRELESS OF THE EAST LP
5055 NORTH POINT PKWY, NP2NE NETWORK ENGINEERING
ALPHARETTA, GA 30022

| Call Sign | File Number |
|---|---|
| KNKA416 | |
| Radio Service | |
| CL - Cellular | |
| Market Numer | Channel Block |
| CMA151 | B |
| Sub-Market Designator | |
| 0 | |

**FCC Registration Number (FRN):** 0007609324

| Market Name |
|---|
| Poughkeepsie, NY |

| Grant Date | Effective Date | Expiration Date | Five Yr Build-Out Date | Print Date |
|---|---|---|---|---|
| 12-19-2017 | 01-09-2020 | 01-22-2028 | | 01-10-2020 |

**Site Information:**

| Location | Latitude | Longitude | Ground Elevation (meters) | Structure Hgt to Tip (meters) | Antenna Structure Registration No. |
|---|---|---|---|---|---|
| 1 | 41-31-43.0 N | 073-46-04.0 W | 352.3 | 43.9 | 1009727 |

**Address:** 1000' NE OF THE END OF WOODMONT ROAD
**City:** EAST FISHKILL **County:** DUTCHESS **State:** NY **Construction Deadline:**

**Antenna: 4**
**Maximum Transmitting ERP in Watts:** 140.820

| Azimuth(from true north) | 0 | 45 | 90 | 135 | 180 | 225 | 270 | 315 |
|---|---|---|---|---|---|---|---|---|
| **Antenna Height AAT (meters)** | 269.700 | 207.900 | 153.000 | 160.600 | 158.100 | 101.400 | 300.200 | 315.600 |
| **Transmitting ERP (watts)** | 47.860 | 28.840 | 3.310 | 0.200 | 0.200 | 0.200 | 0.390 | 7.240 |

**Antenna: 5**
**Maximum Transmitting ERP in Watts:** 140.820

| Azimuth(from true north) | 0 | 45 | 90 | 135 | 180 | 225 | 270 | 315 |
|---|---|---|---|---|---|---|---|---|
| **Antenna Height AAT (meters)** | 269.700 | 207.900 | 153.000 | 160.600 | 158.100 | 101.400 | 300.200 | 315.600 |
| **Transmitting ERP (watts)** | 0.200 | 0.200 | 8.710 | 30.900 | 14.450 | 0.470 | 0.200 | 0.200 |

**Antenna: 6**
**Maximum Transmitting ERP in Watts:** 140.820

| Azimuth(from true north) | 0 | 45 | 90 | 135 | 180 | 225 | 270 | 315 |
|---|---|---|---|---|---|---|---|---|
| **Antenna Height AAT (meters)** | 269.700 | 207.900 | 153.000 | 160.600 | 158.100 | 101.400 | 300.200 | 315.600 |
| **Transmitting ERP (watts)** | 0.200 | 0.200 | 0.200 | 0.200 | 0.580 | 18.200 | 4.900 | 0.370 |

**Conditions:**
Pursuant to §309(h) of the Communications Act of 1934, as amended, 47 U.S.C. §309(h), this license is subject to the following conditions: This license shall not vest in the licensee any right to operate the station nor any right in the use of the frequencies designated in the license beyond the term thereof nor in any other manner than authorized herein. Neither the license nor the right granted thereunder shall be assigned or otherwise transferred in violation of the Communications Act of 1934, as amended. See 47 U.S.C. § 310(d). This license is subject in terms to the right of use or control conferred by §706 of the Communications Act of 1934, as amended. See 47 U.S.C. §606.

**Licensee Name:** VERIZON WIRELESS OF THE EAST LP

**Call Sign:** KNKA416 **File Number:** **Print Date:** 01-10-2020

| Location | Latitude | Longitude | Ground Elevation (meters) | Structure Hgt to Tip (meters) | Antenna Structure Registration No. |
|---|---|---|---|---|---|
| 2 | 41-29-19.0 N | 073-56-50.0 W | 435.9 | 96.0 | 1013991 |

**Address:** MOUNT BEACON
**City:** BEACON **County:** DUTCHESS **State:** NY **Construction Deadline:**

**Antenna: 3**
**Maximum Transmitting ERP in Watts:** 140.820

| Azimuth(from true north) | 0 | 45 | 90 | 135 | 180 | 225 | 270 | 315 |
|---|---|---|---|---|---|---|---|---|
| **Antenna Height AAT (meters)** | 407.300 | 356.500 | 192.800 | 232.600 | 349.200 | 347.500 | 361.200 | 344.600 |
| **Transmitting ERP (watts)** | 4.450 | 2.000 | 2.000 | 2.000 | 2.000 | 2.000 | 9.110 | 76.990 |

**Antenna: 4**
**Maximum Transmitting ERP in Watts:** 140.820

| Azimuth(from true north) | 0 | 45 | 90 | 135 | 180 | 225 | 270 | 315 |
|---|---|---|---|---|---|---|---|---|
| **Antenna Height AAT (meters)** | 407.300 | 356.500 | 192.800 | 232.600 | 349.200 | 347.500 | 361.200 | 344.600 |
| **Transmitting ERP (watts)** | 0.230 | 0.560 | 0.200 | 0.200 | 0.200 | 0.200 | 0.240 | 0.200 |

**Antenna: 5**
**Maximum Transmitting ERP in Watts:** 140.820

| Azimuth(from true north) | 0 | 45 | 90 | 135 | 180 | 225 | 270 | 315 |
|---|---|---|---|---|---|---|---|---|
| **Antenna Height AAT (meters)** | 407.300 | 356.500 | 192.800 | 232.600 | 349.200 | 347.500 | 361.200 | 344.600 |
| **Transmitting ERP (watts)** | 0.200 | 0.200 | 0.200 | 0.200 | 2.750 | 11.020 | 4.170 | 0.200 |

| Location | Latitude | Longitude | Ground Elevation (meters) | Structure Hgt to Tip (meters) | Antenna Structure Registration No. |
|---|---|---|---|---|---|
| 3 | 41-31-18.0 N | 073-38-04.0 W | 328.5 | 86.2 | 1002869 |

**Address:** (Pawling site) 1 MI E RT 292 HARMONY HILL
**City:** PAWLING **County:** DUTCHESS **State:** NY **Construction Deadline:**

**Antenna: 2**
**Maximum Transmitting ERP in Watts:** 140.820

| Azimuth(from true north) | 0 | 45 | 90 | 135 | 180 | 225 | 270 | 315 |
|---|---|---|---|---|---|---|---|---|
| **Antenna Height AAT (meters)** | 82.500 | 156.500 | 156.400 | 219.600 | 224.500 | 169.600 | 178.500 | 216.700 |
| **Transmitting ERP (watts)** | 475.940 | 314.450 | 12.520 | 0.990 | 0.990 | 0.990 | 0.990 | 134.140 |

**Antenna: 3**
**Maximum Transmitting ERP in Watts:** 140.820

| Azimuth(from true north) | 0 | 45 | 90 | 135 | 180 | 225 | 270 | 315 |
|---|---|---|---|---|---|---|---|---|
| **Antenna Height AAT (meters)** | 82.500 | 156.500 | 156.400 | 219.600 | 224.500 | 169.600 | 178.500 | 216.700 |
| **Transmitting ERP (watts)** | 0.990 | 2.040 | 0.990 | 2.320 | 1.170 | 0.990 | 0.990 | 0.990 |

**Antenna: 4**
**Maximum Transmitting ERP in Watts:** 140.820

| Azimuth(from true north) | 0 | 45 | 90 | 135 | 180 | 225 | 270 | 315 |
|---|---|---|---|---|---|---|---|---|
| **Antenna Height AAT (meters)** | 82.500 | 156.500 | 156.400 | 219.600 | 224.500 | 169.600 | 178.500 | 216.700 |
| **Transmitting ERP (watts)** | 0.990 | 0.990 | 0.990 | 0.990 | 3.660 | 1.310 | 1.030 | 4.230 |

**Licensee Name:** VERIZON WIRELESS OF THE EAST LP

**Call Sign:** KNKA416 **File Number:** **Print Date:** 01-10-2020

| Location | Latitude | Longitude | Ground Elevation (meters) | Structure Hgt to Tip (meters) | Antenna Structure Registration No. |
|---|---|---|---|---|---|
| 4 | 41-43-10.1 N | 073-59-43.3 W | 337.7 | 94.5 | 1007753 |

**Address:** ATOP ILLINOIS MOUNTAIN LLOYD (010329)

**City:** Highland **County:** ULSTER **State:** NY **Construction Deadline:**

**Antenna: 2**

| **Maximum Transmitting ERP in Watts:** | 140.820 | | | | | | | |
|---|---|---|---|---|---|---|---|---|
| Azimuth(from true north) | **0** | **45** | **90** | **135** | **180** | **225** | **270** | **315** |
| **Antenna Height AAT (meters)** | 278.100 | 334.300 | 350.300 | 360.800 | 284.400 | 236.800 | 318.900 | 317.000 |
| **Transmitting ERP (watts)** | 0.200 | 0.200 | 0.200 | 1.410 | 9.980 | 6.380 | 0.300 | 0.200 |

**Antenna: 3**

| **Maximum Transmitting ERP in Watts:** | 140.820 | | | | | | | |
|---|---|---|---|---|---|---|---|---|
| Azimuth(from true north) | **0** | **45** | **90** | **135** | **180** | **225** | **270** | **315** |
| **Antenna Height AAT (meters)** | 278.100 | 334.300 | 350.300 | 360.800 | 284.400 | 236.800 | 318.900 | 317.000 |
| **Transmitting ERP (watts)** | 3.260 | 0.200 | 0.200 | 0.200 | 0.200 | 0.200 | 3.580 | 11.220 |

**Antenna: 4**

| **Maximum Transmitting ERP in Watts:** | 140.820 | | | | | | | |
|---|---|---|---|---|---|---|---|---|
| Azimuth(from true north) | **0** | **45** | **90** | **135** | **180** | **225** | **270** | **315** |
| **Antenna Height AAT (meters)** | 278.100 | 334.300 | 350.300 | 360.800 | 284.400 | 236.800 | 318.900 | 317.000 |
| **Transmitting ERP (watts)** | 0.200 | 0.350 | 0.640 | 0.200 | 0.200 | 0.200 | 0.200 | 0.250 |

| Location | Latitude | Longitude | Ground Elevation (meters) | Structure Hgt to Tip (meters) | Antenna Structure Registration No. |
|---|---|---|---|---|---|
| 5 | 41-57-03.7 N | 073-48-18.0 W | 226.8 | 44.5 | |

**Address:** (Milan site) 616 SALISBURY TURNPIKE

**City:** MILAN **County:** DUTCHESS **State:** NY **Construction Deadline:**

**Antenna: 5**

| **Maximum Transmitting ERP in Watts:** | 140.820 | | | | | | | |
|---|---|---|---|---|---|---|---|---|
| Azimuth(from true north) | **0** | **45** | **90** | **135** | **180** | **225** | **270** | **315** |
| **Antenna Height AAT (meters)** | 166.800 | 84.300 | 70.400 | 89.400 | 130.700 | 170.400 | 204.900 | 216.900 |
| **Transmitting ERP (watts)** | 80.690 | 84.600 | 72.710 | 10.310 | 0.980 | 0.980 | 0.980 | 19.790 |

**Antenna: 6**

| **Maximum Transmitting ERP in Watts:** | 140.820 | | | | | | | |
|---|---|---|---|---|---|---|---|---|
| Azimuth(from true north) | **0** | **45** | **90** | **135** | **180** | **225** | **270** | **315** |
| **Antenna Height AAT (meters)** | 166.800 | 84.300 | 70.400 | 86.700 | 130.700 | 170.400 | 204.900 | 216.900 |
| **Transmitting ERP (watts)** | 0.980 | 5.530 | 87.520 | 360.780 | 269.880 | 38.620 | 1.270 | 0.980 |

**Antenna: 7**

| **Maximum Transmitting ERP in Watts:** | 140.820 | | | | | | | |
|---|---|---|---|---|---|---|---|---|
| Azimuth(from true north) | **0** | **45** | **90** | **135** | **180** | **225** | **270** | **315** |
| **Antenna Height AAT (meters)** | 166.800 | 84.300 | 70.400 | 86.700 | 130.700 | 170.400 | 204.900 | 216.900 |
| **Transmitting ERP (watts)** | 28.320 | 0.980 | 0.980 | 0.980 | 7.870 | 112.660 | 375.560 | 238.530 |

**Licensee Name:** VERIZON WIRELESS OF THE EAST LP

**Call Sign:** KNKA416 **File Number:** **Print Date:** 01-10-2020

| Location | Latitude | Longitude | Ground Elevation (meters) | Structure Hgt to Tip (meters) | Antenna Structure Registration No. |
|---|---|---|---|---|---|
| 6 | 41-55-02.3 N | 073-34-16.5 W | 413.6 | 57.9 | |

**Address:** SMITHFIELD ROAD

**City:** NORTHEAST **County:** DUTCHESS **State:** NY **Construction Deadline:**

**Antenna: 2**

**Maximum Transmitting ERP in Watts:** 140.820

| Azimuth(from true north) | 0 | 45 | 90 | 135 | 180 | 225 | 270 | 315 |
|---|---|---|---|---|---|---|---|---|
| **Antenna Height AAT (meters)** | 240.100 | 113.100 | 226.000 | 214.600 | 185.500 | 203.500 | 260.800 | 294.100 |
| **Transmitting ERP (watts)** | 12.400 | 9.700 | 12.200 | 21.700 | 29.800 | 33.800 | 32.000 | 22.100 |

**Antenna: 3**

**Maximum Transmitting ERP in Watts:** 140.820

| Azimuth(from true north) | 0 | 45 | 90 | 135 | 180 | 225 | 270 | 315 |
|---|---|---|---|---|---|---|---|---|
| **Antenna Height AAT (meters)** | 240.100 | 113.100 | 226.000 | 214.600 | 185.500 | 203.500 | 260.800 | 294.100 |
| **Transmitting ERP (watts)** | 35.100 | 21.700 | 16.300 | 11.900 | 11.400 | 13.400 | 27.000 | 36.900 |

**Antenna: 4**

**Maximum Transmitting ERP in Watts:** 140.820

| Azimuth(from true north) | 0 | 45 | 90 | 135 | 180 | 225 | 270 | 315 |
|---|---|---|---|---|---|---|---|---|
| **Antenna Height AAT (meters)** | 240.100 | 113.100 | 226.000 | 214.600 | 185.500 | 203.500 | 260.800 | 294.100 |
| **Transmitting ERP (watts)** | 2.010 | 17.110 | 10.250 | 13.920 | 9.290 | 0.200 | 0.200 | 0.200 |

**Control Points:**

**Control Pt. No. 3**

**Address:** 500 W. Dove Road

**City:** Southlake **County:** TARRANT **State:** TX **Telephone Number:** (800)264-6620

**Waivers/Conditions:**

Special Condition for AU/name change (6/4/2016): Grant of the request to update licensee name is conditioned on it not reflecting an assignment or transfer of control (see Rule 1.948); if an assignment or transfer occurred without proper notification or FCC approval, the grant is void and the station is licensed under the prior name.

# Federal Communications Commission

## Wireless Telecommunications Bureau

## RADIO STATION AUTHORIZATION

LICENSEE: CELLCO PARTNERSHIP

CELLCO PARTNERSHIP
5055 NORTH POINT PKWY, NP2NE NETWORK ENGINEERING
ALPHARETTA, GA 30022

| Call Sign | File Number |
|---|---|
| WQGA906 | 0009773259 |
| Radio Service | |
| AW - AWS (1710-1755 MHz and 2110-2155 MHz) | |

**FCC Registration Number (FRN):** 0003290673

| Grant Date | Effective Date | Expiration Date | Print Date |
|---|---|---|---|
| 12-21-2021 | 12-21-2021 | 11-29-2036 | 12-21-2021 |

| Market Number | Channel Block | Sub-Market Designator |
|---|---|---|
| BEA010 | B | 15 |

| Market Name |
|---|
| New York-No. New Jer.-Long Isl |

| 1st Build-out Date | 2nd Build-out Date | 3rd Build-out Date | 4th Build-out Date |
|---|---|---|---|
| | | | |

**Waivers/Conditions:**

This authorization is conditioned upon the licensee, prior to initiating operations from any base or fixed station, making reasonable efforts to coordinate frequency usage with known co-channel and adjacent channel incumbent federal users operating in the 1710-1755 MHz band whose facilities could be affected by the proposed operations. See, e.g., FCC and NTIA Coordination Procedures in the 1710-1755 MHz Band, Public Notice, FCC 06-50, WTB Docket No. 02-353, rel. April 20, 2006.

**Conditions:**
Pursuant to §309(h) of the Communications Act of 1934, as amended, 47 U.S.C. §309(h), this license is subject to the following conditions: This license shall not vest in the licensee any right to operate the station nor any right in the use of the frequencies designated in the license beyond the term thereof nor in any other manner than authorized herein. Neither the license nor the right granted thereunder shall be assigned or otherwise transferred in violation of the Communications Act of 1934, as amended. See 47 U.S.C. § 310(d). This license is subject in terms to the right of use or control conferred by §706 of the Communications Act of 1934, as amended. See 47 U.S.C. §606.

This license may not authorize operation throughout the entire geographic area or spectrum identified on the hardcopy version. To view the specific geographic area and spectrum authorized by this license, refer to the Spectrum and Market Area information under the Market Tab of the license record in the Universal Licensing System (ULS). To view the license record, go to the ULS homepage at http://wireless.fcc.gov/uls/index.htm?job=home and select "License Search". Follow the instructions on how to search for license information.

**Licensee Name:** CELLCO PARTNERSHIP

**Call Sign:** WQGA906 **File Number:** 0009773259 **Print Date:** 12-21-2021

**700 MHz Relicensed Area Information:**

| Market | Market Name | Buildout Deadline | Buildout Notification | Status |
|---|---|---|---|---|

# Federal Communications Commission

## Wireless Telecommunications Bureau

## RADIO STATION AUTHORIZATION

LICENSEE: CELLCO PARTNERSHIP

CELLCO PARTNERSHIP
5055 NORTH POINT PKWY, NP2NE NETWORK ENGINEERING
ALPHARETTA, GA 30022

| Call Sign | File Number |
|---|---|
| WQWY360 | 0009762590 |
| **Radio Service** | |
| AW - AWS (1710-1755 MHz and 2110-2155 MHz) | |

**FCC Registration Number (FRN):** 0003290673

| Grant Date | Effective Date | Expiration Date | Print Date |
|---|---|---|---|
| 02-09-2022 | 02-09-2022 | 11-29-2036 | 02-10-2022 |

| Market Number | Channel Block | Sub-Market Designator |
|---|---|---|
| REA001 | D | 2 |

| Market Name |
|---|
| Northeast |

| 1st Build-out Date | 2nd Build-out Date | 3rd Build-out Date | 4th Build-out Date |
|---|---|---|---|
| | | | |

**Waivers/Conditions:**

This authorization is conditioned upon the licensee, prior to initiating operations from any base or fixed station, making reasonable efforts to coordinate frequency usage with known co-channel and adjacent channel incumbent federal users operating in the 1710-1755 MHz band whose facilities could be affected by the proposed operations. See, e.g., FCC and NTIA Coordination Procedures in the 1710-1755 MHz Band, Public Notice, FCC 06-50, WTB Docket No. 02-353, rel. April 20, 2006.

AWS operations must not cause harmful interference across the Canadian or Mexican Border. The authority granted herein is subject to future international agreements with Canada or Mexico, as applicable.

**Conditions:**
Pursuant to §309(h) of the Communications Act of 1934, as amended, 47 U.S.C. §309(h), this license is subject to the following conditions: This license shall not vest in the licensee any right to operate the station nor any right in the use of the frequencies designated in the license beyond the term thereof nor in any other manner than authorized herein. Neither the license nor the right granted thereunder shall be assigned or otherwise transferred in violation of the Communications Act of 1934, as amended. See 47 U.S.C. § 310(d). This license is subject in terms to the right of use or control conferred by §706 of the Communications Act of 1934, as amended. See 47 U.S.C. §606.

This license may not authorize operation throughout the entire geographic area or spectrum identified on the hardcopy version. To view the specific geographic area and spectrum authorized by this license, refer to the Spectrum and Market Area information under the Market Tab of the license record in the Universal Licensing System (ULS). To view the license record, go to the ULS homepage at http://wireless.fcc.gov/uls/index.htm?job=home and select "License Search". Follow the instructions on how to search for license information.

**Licensee Name:** CELLCO PARTNERSHIP

**Call Sign:** WQWY360 **File Number:** 0009762590 **Print Date:** 02-10-2022

**700 MHz Relicensed Area Information:**

| Market | Market Name | Buildout Deadline | Buildout Notification | Status |
|---|---|---|---|---|

# Federal Communications Commission

## Wireless Telecommunications Bureau

## RADIO STATION AUTHORIZATION

LICENSEE: CELLCO PARTNERSHIP

CELLCO PARTNERSHIP
5055 NORTH POINT PKWY, NP2NE NETWORK ENGINEERING
ALPHARETTA, GA 30022

| Call Sign | File Number |
|---|---|
| WQWY361 | 0009762572 |
| Radio Service | |
| AW - AWS (1710-1755 MHz and 2110-2155 MHz) | |

**FCC Registration Number (FRN):** 0003290673

| Grant Date | Effective Date | Expiration Date | Print Date |
|---|---|---|---|
| 02-09-2022 | 02-09-2022 | 11-29-2036 | 02-10-2022 |

| Market Number | Channel Block | Sub-Market Designator |
|---|---|---|
| BEA010 | C | 16 |

| Market Name |
|---|
| New York-No. New Jer.-Long Isl |

| 1st Build-out Date | 2nd Build-out Date | 3rd Build-out Date | 4th Build-out Date |
|---|---|---|---|
| | | | |

**Waivers/Conditions:**

This authorization is conditioned upon the licensee, prior to initiating operations from any base or fixed station, making reasonable efforts to coordinate frequency usage with known co-channel and adjacent channel incumbent federal users operating in the 1710-1755 MHz band whose facilities could be affected by the proposed operations. See, e.g., FCC and NTIA Coordination Procedures in the 1710-1755 MHz Band, Public Notice, FCC 06-50, WTB Docket No. 02-353, rel. April 20, 2006.

**Conditions:**
Pursuant to §309(h) of the Communications Act of 1934, as amended, 47 U.S.C. §309(h), this license is subject to the following conditions: This license shall not vest in the licensee any right to operate the station nor any right in the use of the frequencies designated in the license beyond the term thereof nor in any other manner than authorized herein. Neither the license nor the right granted thereunder shall be assigned or otherwise transferred in violation of the Communications Act of 1934, as amended. See 47 U.S.C. § 310(d). This license is subject in terms to the right of use or control conferred by §706 of the Communications Act of 1934, as amended. See 47 U.S.C. §606.

This license may not authorize operation throughout the entire geographic area or spectrum identified on the hardcopy version. To view the specific geographic area and spectrum authorized by this license, refer to the Spectrum and Market Area information under the Market Tab of the license record in the Universal Licensing System (ULS). To view the license record, go to the ULS homepage at http://wireless.fcc.gov/uls/index.htm?job=home and select "License Search". Follow the instructions on how to search for license information.

**Licensee Name:** CELLCO PARTNERSHIP

**Call Sign:** WQWY361 **File Number:** 0009762572 **Print Date:** 02-10-2022

**700 MHz Relicensed Area Information:**

| Market | Market Name | Buildout Deadline | Buildout Notification | Status |
|---|---|---|---|---|

# Federal Communications Commission

## Wireless Telecommunications Bureau

## RADIO STATION AUTHORIZATION

LICENSEE: CELLCO PARTNERSHIP

ATTN: REGULATORY
CELLCO PARTNERSHIP
5055 NORTH POINT PKWY, NP2NE NETWORK ENGINEERING
ALPHARETTA, GA 30022

| Call Sign | File Number |
|---|---|
| WRNE581 | |
| **Radio Service** | |
| PM - 3.7 GHz Service | |

**FCC Registration Number (FRN):** 0003290673

| Grant Date | Effective Date | Expiration Date | Print Date |
|---|---|---|---|
| 07-23-2021 | 07-23-2021 | 07-23-2036 | |

| Market Number | Channel Block | Sub-Market Designator |
|---|---|---|
| PEA001 | A1 | 0 |

| Market Name |
|---|
| New York, NY |

| 1st Build-out Date | 2nd Build-out Date | 3rd Build-out Date | 4th Build-out Date |
|---|---|---|---|
| 07-23-2029 | 07-23-2033 | | |

**Waivers/Conditions:**

Operation for this combination license grants both interim and final rights for this PEA and is not impacted by the relocation process pursuant to 47 CFR ? 27.1412(g).

License is conditioned on compliance with all applicable FCC rules and regulations, including licensee making payments required by 47 C.F.R. §§ 27.1401- 27.1424 as described in FCC 20-22. See FCC 20-22, paras. 178-331.

**Conditions:**
Pursuant to §309(h) of the Communications Act of 1934, as amended, 47 U.S.C. §309(h), this license is subject to the following conditions: This license shall not vest in the licensee any right to operate the station nor any right in the use of the frequencies designated in the license beyond the term thereof nor in any other manner than authorized herein. Neither the license nor the right granted thereunder shall be assigned or otherwise transferred in violation of the Communications Act of 1934, as amended. See 47 U.S.C. § 310(d). This license is subject in terms to the right of use or control conferred by §706 of the Communications Act of 1934, as amended. See 47 U.S.C. §606.

This license may not authorize operation throughout the entire geographic area or spectrum identified on the hardcopy version. To view the specific geographic area and spectrum authorized by this license, refer to the Spectrum and Market Area information under the Market Tab of the license record in the Universal Licensing System (ULS). To view the license record, go to the ULS homepage at http://wireless.fcc.gov/uls/index.htm?job=home and select "License Search". Follow the instructions on how to search for license information.

**Licensee Name:** CELLCO PARTNERSHIP

**Call Sign:** WRNE581 **File Number:** **Print Date:**

**700 MHz Relicensed Area Information:**

| Market | Market Name | Buildout Deadline | Buildout Notification | Status |
|---|---|---|---|---|

# Federal Communications Commission

## Wireless Telecommunications Bureau

## RADIO STATION AUTHORIZATION

LICENSEE: CELLCO PARTNERSHIP

ATTN: REGULATORY
CELLCO PARTNERSHIP
5055 NORTH POINT PKWY, NP2NE NETWORK ENGINEERING
ALPHARETTA, GA 30022

| Call Sign | File Number |
|---|---|
| WRNE582 | |
| **Radio Service** | |
| PM - 3.7 GHz Service | |

**FCC Registration Number (FRN):** 0003290673

| Grant Date | Effective Date | Expiration Date | Print Date |
|---|---|---|---|
| 07-23-2021 | 07-23-2021 | 07-23-2036 | |

| Market Number | Channel Block | Sub-Market Designator |
|---|---|---|
| PEA001 | A2 | 0 |

| Market Name |
|---|
| New York, NY |

| 1st Build-out Date | 2nd Build-out Date | 3rd Build-out Date | 4th Build-out Date |
|---|---|---|---|
| 07-23-2029 | 07-23-2033 | | |

**Waivers/Conditions:**

Operation for this combination license grants both interim and final rights for this PEA and is not impacted by the relocation process pursuant to 47 CFR ? 27.1412(g).

License is conditioned on compliance with all applicable FCC rules and regulations, including licensee making payments required by 47 C.F.R. §§ 27.1401- 27.1424 as described in FCC 20-22. See FCC 20-22, paras. 178-331.

**Conditions:**
Pursuant to §309(h) of the Communications Act of 1934, as amended, 47 U.S.C. §309(h), this license is subject to the following conditions: This license shall not vest in the licensee any right to operate the station nor any right in the use of the frequencies designated in the license beyond the term thereof nor in any other manner than authorized herein. Neither the license nor the right granted thereunder shall be assigned or otherwise transferred in violation of the Communications Act of 1934, as amended. See 47 U.S.C. § 310(d). This license is subject in terms to the right of use or control conferred by §706 of the Communications Act of 1934, as amended. See 47 U.S.C. §606.

This license may not authorize operation throughout the entire geographic area or spectrum identified on the hardcopy version. To view the specific geographic area and spectrum authorized by this license, refer to the Spectrum and Market Area information under the Market Tab of the license record in the Universal Licensing System (ULS). To view the license record, go to the ULS homepage at http://wireless.fcc.gov/uls/index.htm?job=home and select "License Search". Follow the instructions on how to search for license information.

**Licensee Name:** CELLCO PARTNERSHIP

**Call Sign:** WRNE582 **File Number:** **Print Date:**

**700 MHz Relicensed Area Information:**

| Market | Market Name | Buildout Deadline | Buildout Notification | Status |
|---|---|---|---|---|

# Federal Communications Commission

## Wireless Telecommunications Bureau

## RADIO STATION AUTHORIZATION

LICENSEE: CELLCO PARTNERSHIP

ATTN: REGULATORY
CELLCO PARTNERSHIP
5055 NORTH POINT PKWY, NP2NE NETWORK ENGINEERING
ALPHARETTA, GA 30022

| Call Sign | File Number |
|---|---|
| WRNE583 | |
| Radio Service | |
| PM - 3.7 GHz Service | |

**FCC Registration Number (FRN):** 0003290673

| Grant Date | Effective Date | Expiration Date | Print Date |
|---|---|---|---|
| 07-23-2021 | 07-23-2021 | 07-23-2036 | |

| Market Number | Channel Block | Sub-Market Designator |
|---|---|---|
| PEA001 | A3 | 0 |

| Market Name |
|---|
| New York, NY |

| 1st Build-out Date | 2nd Build-out Date | 3rd Build-out Date | 4th Build-out Date |
|---|---|---|---|
| 07-23-2029 | 07-23-2033 | | |

**Waivers/Conditions:**

Operation for this combination license grants both interim and final rights for this PEA and is not impacted by the relocation process pursuant to 47 CFR ? 27.1412(g).

License is conditioned on compliance with all applicable FCC rules and regulations, including licensee making payments required by 47 C.F.R. §§ 27.1401- 27.1424 as described in FCC 20-22. See FCC 20-22, paras. 178-331.

**Conditions:**
Pursuant to §309(h) of the Communications Act of 1934, as amended, 47 U.S.C. §309(h), this license is subject to the following conditions: This license shall not vest in the licensee any right to operate the station nor any right in the use of the frequencies designated in the license beyond the term thereof nor in any other manner than authorized herein. Neither the license nor the right granted thereunder shall be assigned or otherwise transferred in violation of the Communications Act of 1934, as amended. See 47 U.S.C. § 310(d). This license is subject in terms to the right of use or control conferred by §706 of the Communications Act of 1934, as amended. See 47 U.S.C. §606.

This license may not authorize operation throughout the entire geographic area or spectrum identified on the hardcopy version. To view the specific geographic area and spectrum authorized by this license, refer to the Spectrum and Market Area information under the Market Tab of the license record in the Universal Licensing System (ULS). To view the license record, go to the ULS homepage at http://wireless.fcc.gov/uls/index.htm?job=home and select "License Search". Follow the instructions on how to search for license information.

**Licensee Name:** CELLCO PARTNERSHIP

**Call Sign:** WRNE583 **File Number:** **Print Date:**

**700 MHz Relicensed Area Information:**

| Market | Market Name | Buildout Deadline | Buildout Notification | Status |
|---|---|---|---|---|

# Federal Communications Commission

## Wireless Telecommunications Bureau

## RADIO STATION AUTHORIZATION

LICENSEE: CELLCO PARTNERSHIP

ATTN: REGULATORY
CELLCO PARTNERSHIP
5055 NORTH POINT PKWY, NP2NE NETWORK ENGINEERING
ALPHARETTA, GA 30022

| Call Sign | File Number |
|---|---|
| WQDU938 | |
| Radio Service | |
| CW - PCS Broadband | |

**FCC Registration Number (FRN):** 0003290673

| Grant Date | Effective Date | Expiration Date | Print Date |
|---|---|---|---|
| 10-08-2015 | 02-16-2017 | 11-04-2025 | |

| Market Number | Channel Block | Sub-Market Designator |
|---|---|---|
| BTA361 | C | 3 |

| Market Name |
|---|
| Poughkeepsie-Kingston, NY |

| 1st Build-out Date | 2nd Build-out Date | 3rd Build-out Date | 4th Build-out Date |
|---|---|---|---|
| 11-04-2010 | | | |

**Waivers/Conditions:**

NONE

**Conditions:**
Pursuant to §309(h) of the Communications Act of 1934, as amended, 47 U.S.C. §309(h), this license is subject to the following conditions: This license shall not vest in the licensee any right to operate the station nor any right in the use of the frequencies designated in the license beyond the term thereof nor in any other manner than authorized herein. Neither the license nor the right granted thereunder shall be assigned or otherwise transferred in violation of the Communications Act of 1934, as amended. See 47 U.S.C. § 310(d). This license is subject in terms to the right of use or control conferred by §706 of the Communications Act of 1934, as amended. See 47 U.S.C. §606.

This license may not authorize operation throughout the entire geographic area or spectrum identified on the hardcopy version. To view the specific geographic area and spectrum authorized by this license, refer to the Spectrum and Market Area information under the Market Tab of the license record in the Universal Licensing System (ULS). To view the license record, go to the ULS homepage at http://wireless.fcc.gov/uls/index.htm?job=home and select "License Search". Follow the instructions on how to search for license information.

**Licensee Name:** CELLCO PARTNERSHIP

**Call Sign:** WQDU938 **File Number:** **Print Date:**

**700 MHz Relicensed Area Information:**

| Market | Market Name | Buildout Deadline | Buildout Notification | Status |
|---|---|---|---|---|

# Federal Communications Commission

## Wireless Telecommunications Bureau

## RADIO STATION AUTHORIZATION

LICENSEE: CELLCO PARTNERSHIP

ATTN: REGULATORY
CELLCO PARTNERSHIP
5055 NORTH POINT PKWY, NP2NE NETWORK ENGINEERING
ALPHARETTA, GA 30022

| Call Sign | File Number |
|---|---|
| WQEM958 | |
| Radio Service | |
| CW - PCS Broadband | |

**FCC Registration Number (FRN):** 0003290673

| Grant Date | Effective Date | Expiration Date | Print Date |
|---|---|---|---|
| 03-14-2016 | 11-01-2016 | 03-08-2026 | |

| Market Number | Channel Block | Sub-Market Designator |
|---|---|---|
| BTA361 | C | 5 |

| Market Name |
|---|
| Poughkeepsie-Kingston, NY |

| 1st Build-out Date | 2nd Build-out Date | 3rd Build-out Date | 4th Build-out Date |
|---|---|---|---|
| 03-08-2011 | | | |

**Waivers/Conditions:**

Special Condition for AU/name change (6/4/2016): Grant of the request to update licensee name is conditioned on it not reflecting an assignment or transfer of control (see Rule 1.948); if an assignment or transfer occurred without proper notification or FCC approval, the grant is void and the station is licensed under the prior name.

**Conditions:**
Pursuant to §309(h) of the Communications Act of 1934, as amended, 47 U.S.C. §309(h), this license is subject to the following conditions: This license shall not vest in the licensee any right to operate the station nor any right in the use of the frequencies designated in the license beyond the term thereof nor in any other manner than authorized herein. Neither the license nor the right granted thereunder shall be assigned or otherwise transferred in violation of the Communications Act of 1934, as amended. See 47 U.S.C. § 310(d). This license is subject in terms to the right of use or control conferred by § 706 of the Communications Act of 1934, as amended. See 47 U.S.C. §606.

This license may not authorize operation throughout the entire geographic area or spectrum identified on the hardcopy version. To view the specific geographic area and spectrum authorized by this license, refer to the Spectrum and Market Area information under the Market Tab of the license record in the Universal Licensing System (ULS). To view the license record, go to the ULS homepage at http://wireless.fcc.gov/uls/index.htm?job=home and select "License Search". Follow the instructions on how to search for license information.

**Licensee Name:** CELLCO PARTNERSHIP

**Call Sign:** WQEM958 **File Number:** **Print Date:**

**700 MHz Relicensed Area Information:**

| Market | Market Name | Buildout Deadline | Buildout Notification | Status |
|---|---|---|---|---|

# Verizon Wireless Communications Facility

## Engineering Necessity Case – "Kent Road and Spook Hill Park"

Knapps South Site

Town Of Poughkeepsie

Wappingers Falls Site

Imperial Blvd Site

Spook Hill Park Search Area And Project Location

Wappinger State Police

Spook Hill Site

Route 9D

Route 9

Glenham Site

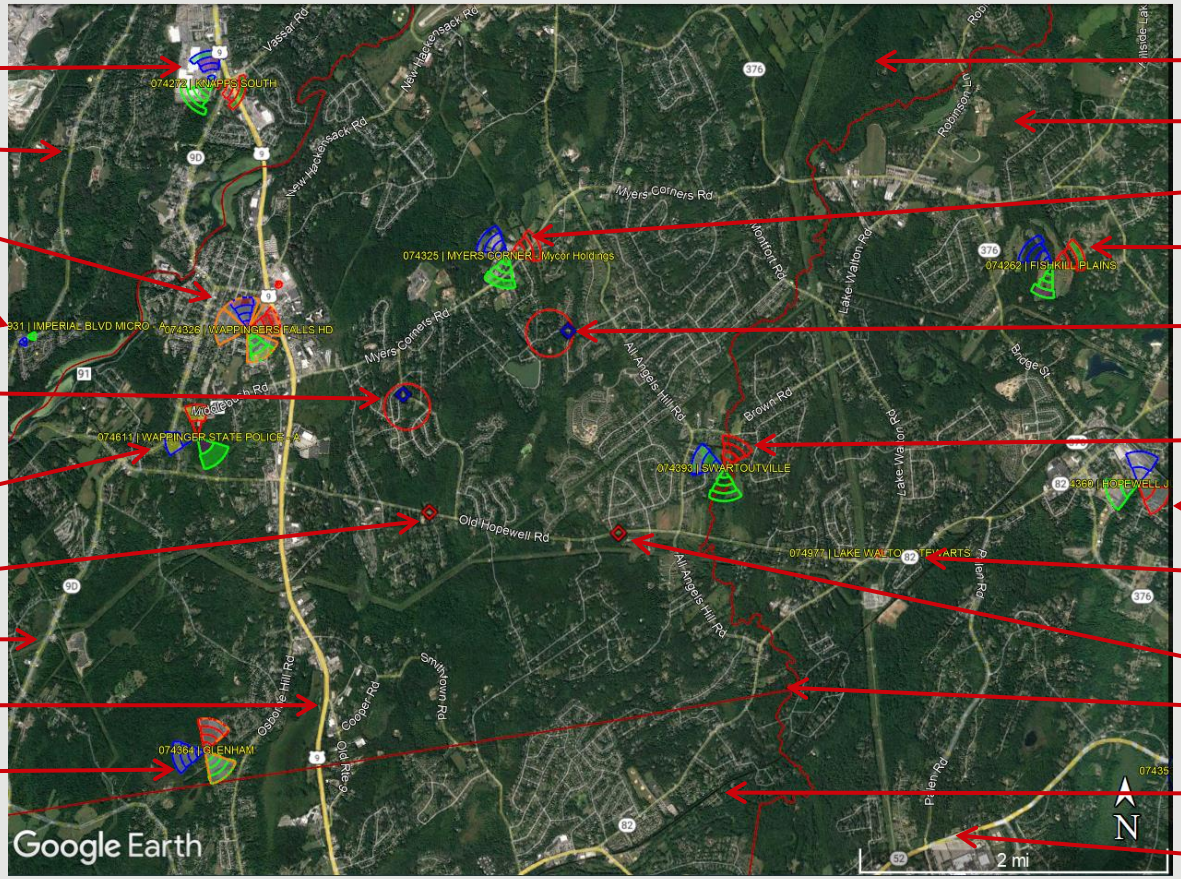


Town Of Wappinger

Town Of East Fishkill

Myers Corner Site

Fishkill Plains Site

Kent Road Project Location And Search Area

Swartoutville Site

Hopewell Junction Site

Lake Walton Stewarts Site

Old Hopewell Rd Site

Town Boundary

Town Of Fishkill

Route 52

**Prepared by: Wasif Sharif**

**Project: The project is the installation and operation of new co-located wireless telecommunications sites in the Town of Wappinger (the "Project Facilities").**

verizon

April 3rd, 2023

# Verizon macro facilities within 5 miles of the proposed sites

| Verizon Site Name | Address | Site Status | Latitude | Longitude | Ground Elevation | Antenna Height | Frequency |
|---|---|---|---|---|---|---|---|
| BEEKMAN GOLF | Carpenter Road,East Fishkill,NY12533 | On-Air | 41.57788056 | -73.7844 | 367.45 | 108.5 | AWS, PCS, WCS, Cellular, C-band |
| CHELSEA MICRO - A | 21 Market Street,Wappinger Falls,NY12512 | On-Air | 41.55311667 | -73.96905278 | 19.69 | 43 | AWS, PCS |
| DALEY RD | 272 Titusville Road,Poughkeepsie,NY12603 | On-Air | 41.65852778 | -73.85245278 | 229.66 | 44.8 | AWS, PCS |
| EAST FISHKILL | 1920 Rte 52,East Fishkill,NY12533 | On-Air | 41.551917 | -73.794306 | 278.87 | 105 | AWS, WCS |
| FISHKILL DT | 5 Merritt Boulevard,Fishkill,NY12524 | On-Air | 41.531542 | -73.893797 | 213.34 | 120 | AWS, PCS, WCS, C-band |
| FISHKILL G1 | 416 Carey Road - Honness Mtn,FISHKILL,NY12524 | On-Air | 41.531481 | -73.863467 | 892.39 | 113 | AWS, PCS, WCS, Cellular, C-band |
| FISHKILL PLAINS | 69 Glenns Way,Hopewell Junction,NY12533 | On-Air | 41.599172 | -73.812972 | 426.51 | 104 | AWS, PCS, WCS, C-band |
| FISHKILL WEST | 841 Route 52,Fishkill,NY12524 | On-Air | 41.52760555 | -73.91997777 | 237.53 | 96 | AWS, PCS, WCS, C-band, CBRS |
| GLENHAM | 308 Baxtertown Rd,Fishkill,NY12554 | On-Air | 41.55386 | -73.918639 | 219.82 | 136 | AWS, PCS, WCSC-band, CBRS |
| GROVEVILLE | 750 Kirby Town Road,Beacon,NY12508 | On-Air | 41.52893 | -73.94591 | 305.12 | 173 | AWS, PCS, WCS, Cellular, C-band |
| HOPEWELL JUNCTION | 888 RTE 82,hopewell Junction,NY12533 | On-Air | 41.578778 | -73.802056 | 249.34 | 120 | AWS, WCS |
| IMPERIAL BLVD MICRO | 1582 Route 9,Wappinggers Falls,NY12590 | On-Air | 41.59753333 | -73.90959722 | 157.48 | 36.8 | AWS |
| JOHN JAY MICRO | 2070 Route 52,Hopewell Junction,NY12533 | On-Air | 41.53859167 | -73.82306111 | 246.06 | 89 | AWS, PCS |
| KNAPPS CORNER | 4 Neptune rd,Poughkeepsie,NY12601 | On-Air | 41.644408 | -73.925208 | 133.08 | 108 | AWS, PCS, WCS, C-band |
| KNAPPS SOUTH | 1893 South Rd,Poughkeepsie,NY12601 | On-Air | 41.61636 | -73.91776 | 183.73 | 87.5 | AWS, PCS, WCS, C-band |
| LAKE WALTON STEWARTS | 551 Rt 82,HOPEWELL JUNCTION,NY12533 | On-Air | 41.57231111 | -73.83424167 | 252.62 | 21.3 | AWS |
| MYERS CORNER | 155 Myers Corners Rd,Wappingers Falls,NY12590 | On-Air | 41.600203 | -73.880736 | 201.27 | 38 | AWS, PCS, WCS, Cellular, C-band |
| NEW HACKENSACK | 80 Airport Dr,Wappinger Falls,NY12590 | On-Air | 41.629778 | -73.86825 | 229.66 | 76 | AWS, PCS, WCS, C-band |
| NEW HAMBURG FD MICRO | 15 Channingville Road,New Hamburg,NY12590 | On-Air | 41.592653 | -73.941256 | 134.51 | 42.5 | AWS, PCS |
| NEW HAMBURG MARINA MICRO - A | 15 Point Street,Poughkeepsie,NY12590 | On-Air | 41.586296 | -73.950508 | 9.84 | 47.2 | AWS, PCS, WCS, C-band, CBRS |
| OLD HOPEWELL RD | opposite 409 Old Hopewell Rd,Town of Wappinger,NY12590 | Planned | 41.574232 | -73.866943 | [291.99] | 26.5 | AWS, PCS, WCS, C-band, CBRS |
| POUGHKEEPSIE GALLERIA MALL IBS | 2001 South Road,Wappingers Falls,NY12590 | On-Air | 41.625292 | -73.920914 | 206.69 | 15 | AWSWCS |
| RED OAKS MICRO | 40 Vassar Road,Poughkeepsie,NY12603 | On-Air | 41.652667 | -73.875056 | 160.76 | 18 | AWS |
| RED OAKS MILLS | 198 Ceder Ave,Poughkeepsie,NY12063 | On-Air | 41.660878 | -73.904858 | 221.3 | 88.5 | AWS, PCS, WCS, Cellular, C-band, CBRS |
| SPOOK HILL | 285 Old Hopewell Rd,Wappingers Falls,NY12590 | Planned | 41.576187 | -73.890596 | [265.75] | 45.5 | AWS, PCS, WCS, C-band, CBRS |
| SPRING RD MICRO - A | 2023 South Road,Poughkeepsie,NY12601 | On-Air | 41.6280333 | -73.9169444 | 173.88 | 17 | AWS |
| SWARTOUTVILLE | 30 Soccerfield Drive,Wappingers,NY12590 | On-Air | 41.58028889 | -73.853775 | 236.22 | 114 | AWS, PCS, WCS, Cellular, C-band |
| TIMBERLINE | 260 Boardman Rd,Poughkeepsie,NY12603 | On-Air | 41.6594 | -73.88656111 | 248.4 | 100 | AWS, PCS, WCS, Cellular, C-band, CBRS |
| WAPPINGER STATE POLICE - A | 20 Middlebush Road,Wappingers Falls,NY12590 | On-Air | 41.583192 | -73.919694 | 141.08 | 118 | AWS, WCS |
| WAPPINGERS FALLS HD | Wenliss Terrace,Wappingers Falls,NY12590 | On-Air | 41.59326 | -73.913389 | 161.45 | 102 | AWS, PCS, WCS, Cellular, C-band, CBRS |

* OLD HOPEWELL RD and SPOOK HILL are not on air yet but will be considered on air throughout the document as they both are in construction phase

verizon

# Introduction

The purpose of this analysis is to summarize and communicate the technical radio frequency (RF) information used in the justification of these two new sites.

Coverage and/or capacity deficiencies are the two main drivers that prompt the need for a new wireless communications facility/site. All sites provide a mixture of both capacity and coverage for the benefit of the end user.

**Coverage** can be defined as the existence of signal of usable strength and quality in an area, including but not limited to in-vehicles or in-buildings.

The need for improved coverage is identified by RF Engineers that are responsible for developing and maintaining the network. RF Engineers utilize both theoretical and empirical data sets (propagation maps and real world coverage measurements). Historically, coverage improvements have been the primary justification of new sites.

**Capacity** can be defined as the amount of traffic (voice and data) a given site can process before significant performance degradation occurs.

When traffic volume exceeds the capacity limits of a site serving a given area, network reliability and user experience degrades. Ultimately this prevents customers from making/receiving calls, applications cease functioning, internet connections time out and data speeds fail. This critical condition is more important than just a simple nuisance for some users. Degradation of network reliability and user experience can affect emergency responders and to persons in a real emergency situation can literally mean life or death.

# Project Need Overview

The project areas, located in the central portion of the Town of Wappinger are currently served by two sites. This sites are overloaded requiring capacity relief. Additionally these project areas are subject to significant terrain challenges for RF (signal) propagation. This terrain combined with area foliage and long distance prevent effective propagation of Verizon's RF signals into these areas compounding the capacity issue with areas of variable coverage creating significant gaps in coverage.

The first serving site is **Swartoutville ,** located in the Town of Wappinger, is approximately 1.35 miles southeast (of Kent Road project location) situated on an existing Stealth structure located off **Soccerfield Drive**. While this site provides weak/variable coverage in portions of the project areas, it does so from a terrain and distance challenged position making the site not capable of efficiently or effectively providing adequate coverage or capacity.

The second serving site is **WAPPINGERS FALLS,** located in the Town of Wappinger, is approximately a mile northwest (of Spook Hill Park project location) situated on a Water Tank located off **Wenliss Terrace**. While this site provides weak/variable coverage in portions of the project areas, it does so from a terrain and distance challenged position making the site not capable of efficiently or effectively providing adequate coverage or capacity.

Available (mid band AWS) carriers at these and other area sites are not capable of effectively serving/offloading the project area due to inherent propagation losses from distance, challenging terrain and in building coverage losses negatively impacting mid band coverage and capacity offload capabilities. There are other Verizon sites in this general area but due to distance and terrain they also do not provide any significant overlapping coverage in the area in question that could allow for increased capacity and improved coverage from other sources.

The primary objectives for these projects are to increase capacity and improve coverage throughout central portion of the Town of Wappinger, more specifically portions of Kent Road, Lake Oniad Dr., Fenmore Dr., Pippin Ln, Baldwin Dr., Spook Hill Rd, Roberts Rd, Mina Dr, Nancy Aleen Dr., as well as neighboring residential and commercial areas along and near these roads. In order to offload capacity from **Swartoutville** and **WAPPINGERS FALLS** a new dominant server must be created. This new dominant coverage will effectively offload the existing overloaded sites/cells as well as provide improved coverage where significant gaps exist today.

Following the search for co-locatable structures to resolve the aforementioned challenges, Verizon took all the existing utility poles within the search area into consideration and found none viable because of the minimum height requirement. For **Kent Road and Spook Hill Park projects,** Verizon proposes to attach the necessary antennas to the new poles (in ROW). Verizon's antenna will utilize 45.2' for the ACL (Antenna Center Line) with a top of antenna height of 46.2'. These solutions will provide the necessary coverage and capacity improvements needed.

# Wireless LTE (Voice and Data) Growth

- Wireless smart city solutions are being used to track available parking and minimize pollution and wasted time.
- These same solutions are being used to track pedestrian and bike traffic to help planning and minimize accidents.
- Smart, wireless connected lighting enables cities to control lighting remotely, saving energy and reducing energy costs by 20%.
- 4G technology is utilized to track and plan vehicle deliveries to minimize travel, maximize efficiency, and minimize carbon footprint.
- 4G technology is also used to monitor building power usage down to the circuit level remotely, preventing energy waste and supporting predictive maintenance on machines and equipment.
- Wireless sensors placed in shipments are being used to track temperature-sensitive medications, equipment, and food. This is important for preventing the spread of food-borne diseases that kill 3,000 Americans each year.

Source: Verizon Innovation Center, February. 2018

Wireless is a critical component in schools and for today's students.

- **20,000 learning apps are available for iPads. 72% of iTunes top selling educational apps are designed for preschoolers and elementary students.**
- **600+ school districts replaced text books with tablets in classrooms.**
- **77% of parents think tablets are beneficial to kids.**
- **74% of school administrators feel digital content increases student engagement.**
- **70% of teens use cellphones to help with homework.**

Source: CTIA's Infographics Today's Wireless Family, October, 2017

**The average North American smartphone user will consume 48 GB of data per month in 2023, up from just 5.2 GB per month in 2016 and 7.1 GB per month in 2017 .[1]**


**Of American homes are wireless only.[2]**

**In North America, the average household has 13 connected devices with smartphones outnumbering tablets 6 to 1.[3]**

1. Ericsson Mobility Report, November 2017
2. CDC's 2018 Wireless Substitution: Early Release of Estimates From the National Health Interview Survey, January-July, 2018
3. IHS Market Connected Device Market Monitor: Q1 2016 , June 7, 2016

**A wireless network is like a highway system…**

US, mobile data traffic was 1.3 Exabytes per month in 2016, the equivalent of 334 million DVDs each month or 3,687 million text messages each second **according to** Cisco VNI Mobile Forecast Highlights, 2016-2021,Feb 2017

verizon

## Wireless facilities and property values.

**Cell service in and around the home has emerged as a critical factor in home-buying decisions.**

National studies demonstrate that most home buyers value good cell service over many other factors including the proximity of schools when purchasing a home.


More than 75% of prospective home buyers said a good cellular connection was important to them.[1]


The same study showed that 83% of Millennials (those born between 1982 and 2004) said cell service was the most important fact in purchasing a home.


90% of U.S. households use wireless service. Citizens need access to 911 and reverse 911 and wireless may be their only connection.[2]

1. RootMetrics/Money, The Surprising Thing Home Buyers Care About More than Schools, June 2, 2015
2. CTIA, June 2015


With over 80% of 9-1-1 calls now coming from cell phones…[1]

**240 million**

911 calls are made annually. In many areas, 80% or more are from wireless devices. [1]

1. National Emergency Number Association, Enhancing 9-1-1 Operations With Automated Abandoned Callback & Location Accuracy (Motorola Solutions) (August 23, 2018)

# Explanation of Wireless Capacity

**Capacity** in this analysis is evaluated with up to three metrics further explained below. These metrics assist in determining actual usage for a given site as well as are used to project when a site is expected to run out of capacity (i.e. reach a point of exhaustion where it can no longer process the volume of voice and data requested by local wireless devices, thus no longer providing adequate service).

- Forward Data Volume ("**FDV**"), is a measurement of usage (data throughput) on a particular site over a given period of time.
- Average Schedule Eligible User ("**ASEU**"), is a measurement of the loading of the control channels and systems of a given site.
- Average Active Connections ("**AvgAC**") is a measurement of the number of devices actively connected to a site in any given time slot.

Verizon Wireless uses proprietary algorithms developed by a task force of engineers and computer programmers to monitor each site in the network and accurately project and identify when sites will approach their capacity limits. Using a rolling two-year window for projected exhaustion dates allows enough time, in most cases, to develop and activate a new site. It is critical that these capacity approaching sectors are identified early and the process gets started and completed in time for new solutions (sites) to be on air before network issues impact the customers.

# Capacity Utilization
# FDV (Swartoutville Gamma)

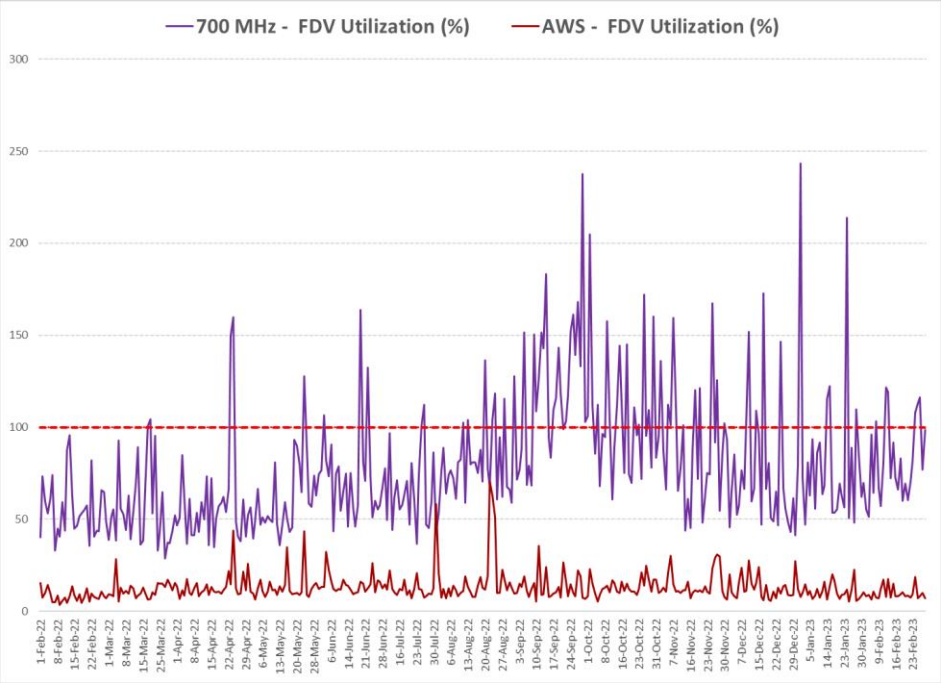


**Summary**: This graph shows FDV (**F**orward **D**ata **V**olume) which is a measurement of the customer data usage that this sector currently serves. As this limit is approached, data rates slow to unacceptable levels, potentially causing unreliable service for Verizon Wireless customers.

The purple line represents the daily max busy hour 700MHz utilization and the dark red line is daily max busy hour AWS utilization on the **Gamma** sector of the **Swartoutville** site. The red dashed line is the limit where the sector reaches exhaustion and service starts to significantly degrade. The point in time where we see the purple or dark red lines reach or exceed the red dashed line is when service quickly degrades as usage continues to increase.

**Detail**: The existing **Swartoutville Gamma** sector shown above has exceeded its capability of supporting FDV requirements as shown by the purple line exceeding the max utilization threshold (red dashed line). FDV is one of up to three metrics used in this presentation to evaluate capacity capability in this area. This graph also reveals the inability of the AWS carrier (dark red line) to provide the necessary capacity offload for the low band carrier due to differences in RF propagation characteristics. The solution is network densification.

verizon

# Capacity Utilization
# FDV (Wappingers Falls Beta)

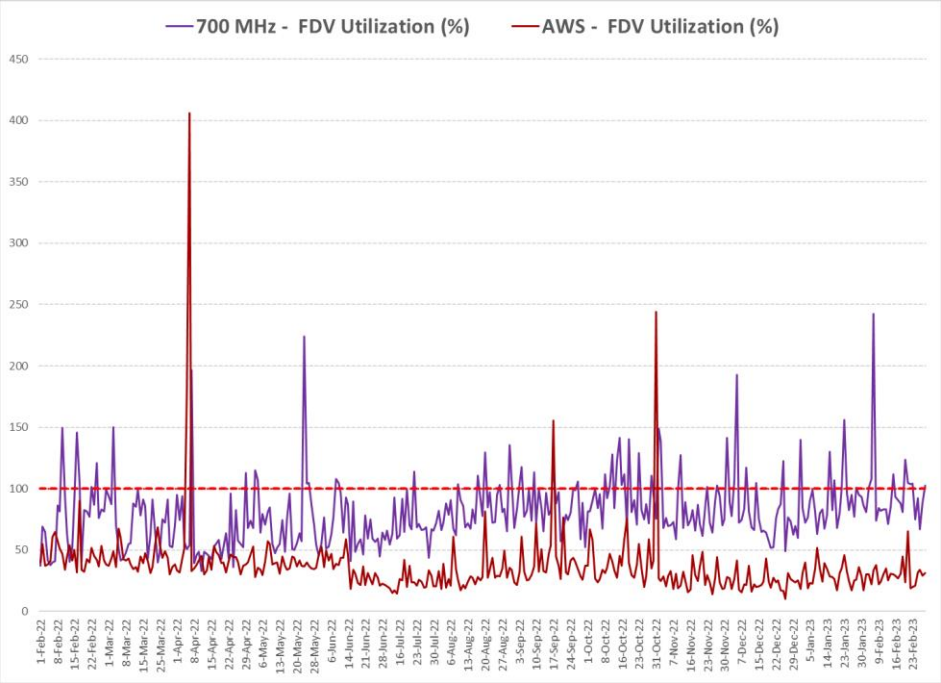


**Summary**: This graph shows FDV (**F**orward **D**ata **V**olume) which is a measurement of the customer data usage that this sector currently serves. As this limit is approached, data rates slow to unacceptable levels, potentially causing unreliable service for Verizon Wireless customers.

The purple line represents the daily max busy hour 700MHz utilization and the dark red line is daily max busy hour AWS utilization on the **Beta** sector of the **Wappingers Falls** site. The red dashed line is the limit where the sector reaches exhaustion and service starts to significantly degrade. The point in time where we see the purple or dark red lines reach or exceed the red dashed line is when service quickly degrades as usage continues to increase.

**Detail**: The existing **Wappingers Falls Beta** sector shown above has exceeded its capability of supporting FDV requirements as shown by the purple line exceeding the max utilization threshold (red dashed line). FDV is one of up to three metrics used in this presentation to evaluate capacity capability in this area. This graph also reveals the inability of the AWS carrier (dark red line) to provide the necessary capacity offload for the low band carrier due to differences in RF propagation characteristics. The solution is network densification.

verizon

# Capacity Utilization
# ASEU (Wappingers Falls Beta)

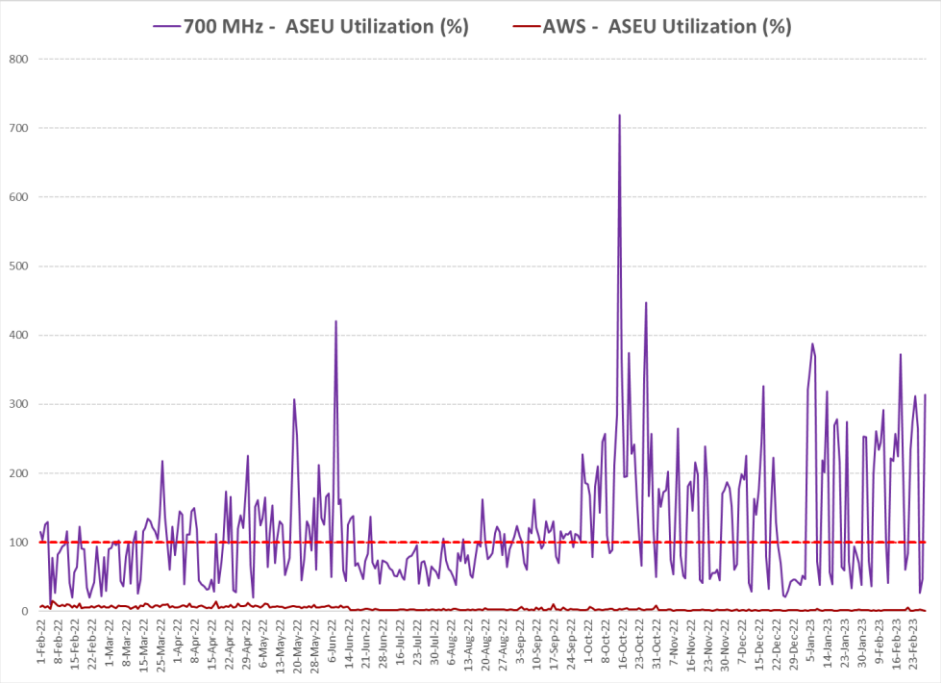


**Summary**: This graph shows ASEU (**A**verage **S**chedule **E**ligible **U**ser). ASEU is a measurement of the loading of the control channels and systems of a given site. The ASEU load is heavily impacted by distant users or those in poor RF conditions.

The purple line represents the daily max busy hour 700MHz utilization and the dark red line is daily max busy hour AWS utilization on the **Beta** sector of the **Wappingers Falls** site. The red dashed line is the limit where the sector reaches exhaustion and service starts to significantly degrade. The point in time where we see the purple or dark red lines reach or exceed the red dashed line is when service quickly degrades as usage continues to increase.

**Detail**: The existing **Wappingers Falls** sector shown above has exceeded its capability of supporting ASEU requirements as shown by the purple line exceeding the max utilization threshold (red dashed line). This graph also reveals the inability of the AWS carrier (dark red line) to provide the necessary capacity offload for the low band carrier due to differences in RF propagation characteristics. The solution is network densification.

verizon

# Explanation of Wireless Coverage

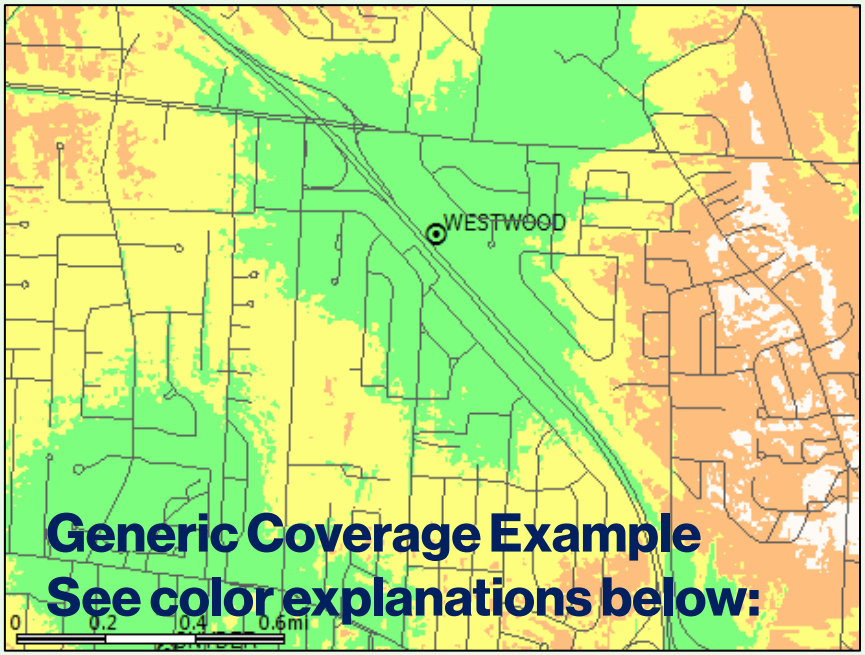


**Coverage** is best shown via coverage maps. RF engineers use computer simulation tools that take into account terrain, vegetation, building types, and site specifics to model the RF environment. This model is used to simulate the real world network and assist engineers to evaluate the impact of a proposed site (along with industry experience and other tools).

Many Verizon Wireless sites provide 3G CDMA at 850 MHz and 4G LTE at 700 MHz. As capacity requirements increase, higher frequency PCS (1900 MHz) and AWS (2100 MHz) carriers are added. In some mountaintop situations the mid band (higher frequency) AWS and PCS carriers are not fully effective due to excessive distance from the user population.

Coverage provided by a given site is affected by the frequencies used. Lower frequencies propagate further distances, and are less attenuated by clutter than higher frequencies. To provide similar coverage levels at higher frequencies, a denser network of sites is required (network densification).

Note the affect of clutter on the predicted coverage footprint above

**Dark Green >/= -75dBm RSRP, typically serves dense urban areas as well as areas of substantial construction (colleges, hospitals, dense multi family etc.)
Green >/= -85dBm RSRP, typically serves suburban single family residential and light commercial buildings
Yellow >/= -95dBm RSRP, typically serves most rural/suburban-residential and in car applications
Orange >/= -105dBm RSRP, rural highway coverage, subject to variable conditions including fading and seasonality gaps
White = <-105dBm RSRP, variable to no reliable coverage gap area

More detailed, site-specific coverage slides are later in the presentation
*Signal strength requirements vary as dictated by specific market conditions
** Not displayed in example map, layer not used in all site justifications

verizon

# Explanation of this Search Area


Kent Road and Spook Hill Park Search Areas

A **Search Area** is the geographical area within which a new site is targeted to solve a coverage or capacity deficiency. Three of the factors taken into consideration when defining a search area are topography, user density, and the existing network.

- **Topography** must be considered to minimize the obstacles between the proposed site and the target coverage area. For example, a site at the bottom of a ridge will not be able to cover the other side from a certain height.
- In general, the farther from a site the **User Population** is, the weaker the RF conditions are and the worse their experience is likely to be. These distant users also have an increased impact on the serving site's capacity. In the case of a multi sector site, centralized proximity is essential to allow users to be evenly distributed and allow efficient utilization of the site's resources.
- The existing **Network Conditions** also guide the design of a new site. Sites placed too close together create interference due to overlap and are an inefficient use of resources. Sites that are too tall or not properly integrated with existing sites cause interference and degrade service for existing users.
- Existing co-locatable structures inside the search area as well as within a reasonable distance of the search area are submitted by site acquisition and reviewed by RF Engineering. If possible, RF will make use of existing or nearby structures before proposing to build new towers.

To resolve the coverage and capacity deficiencies previously detailed, Verizon Wireless is seeking to add two new cell facilities within these areas to improve wireless service capacity and coverage. By offloading traffic from **Swartoutville** and **Wappingers Falls** with the proposed sites, adequate and reliable service will be restored. The new **Kent Road** and **Spook Hill Park** sites will provide dominant and dedicated signal to the identified portions of the Town of Wappinger. This helps to improve not only the **Kent Road** and **Spook Hill Park** project areas but will also indirectly result with significant improvements in the central portion of the Town of Wappinger.

verizon

# Existing 700MHz Best Server -105dBm RSRP

Best Server plots depict the actual footprint of each sector in question at one threshold so the viewer can accurately evaluate the area offloaded by the new sites dominant signal area.

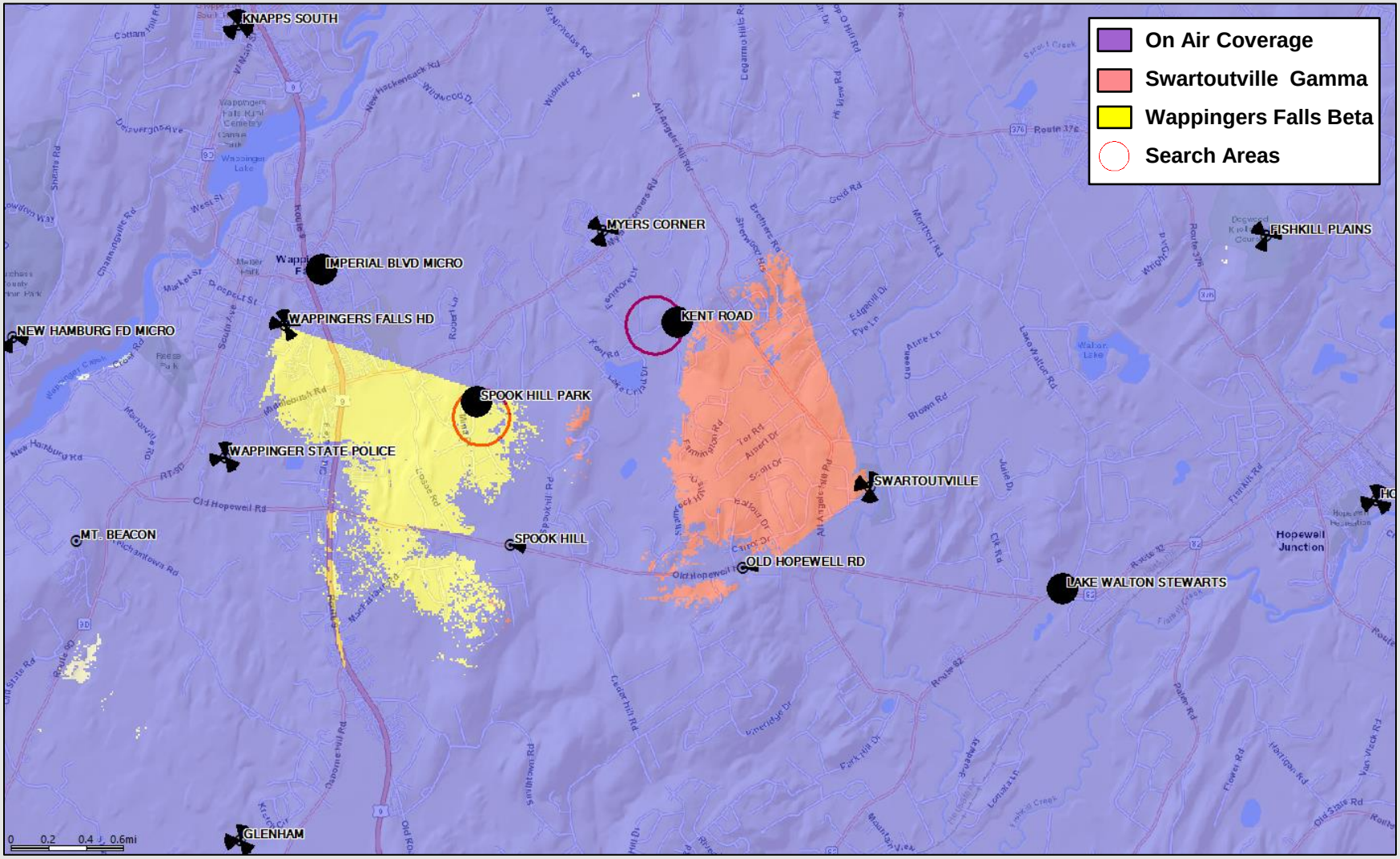


The map above represents existing low band coverage from existing sites, with the sites in need of capacity offload detailed in the legend above. Blue coverage is from other on air sites.

verizon

# Proposed 700MHz Best Server -105dBm RSRP

Best Server plots depict the actual footprint of each sector in question at one threshold so the viewer can accurately evaluate the area offloaded by the new sites dominant signal area.

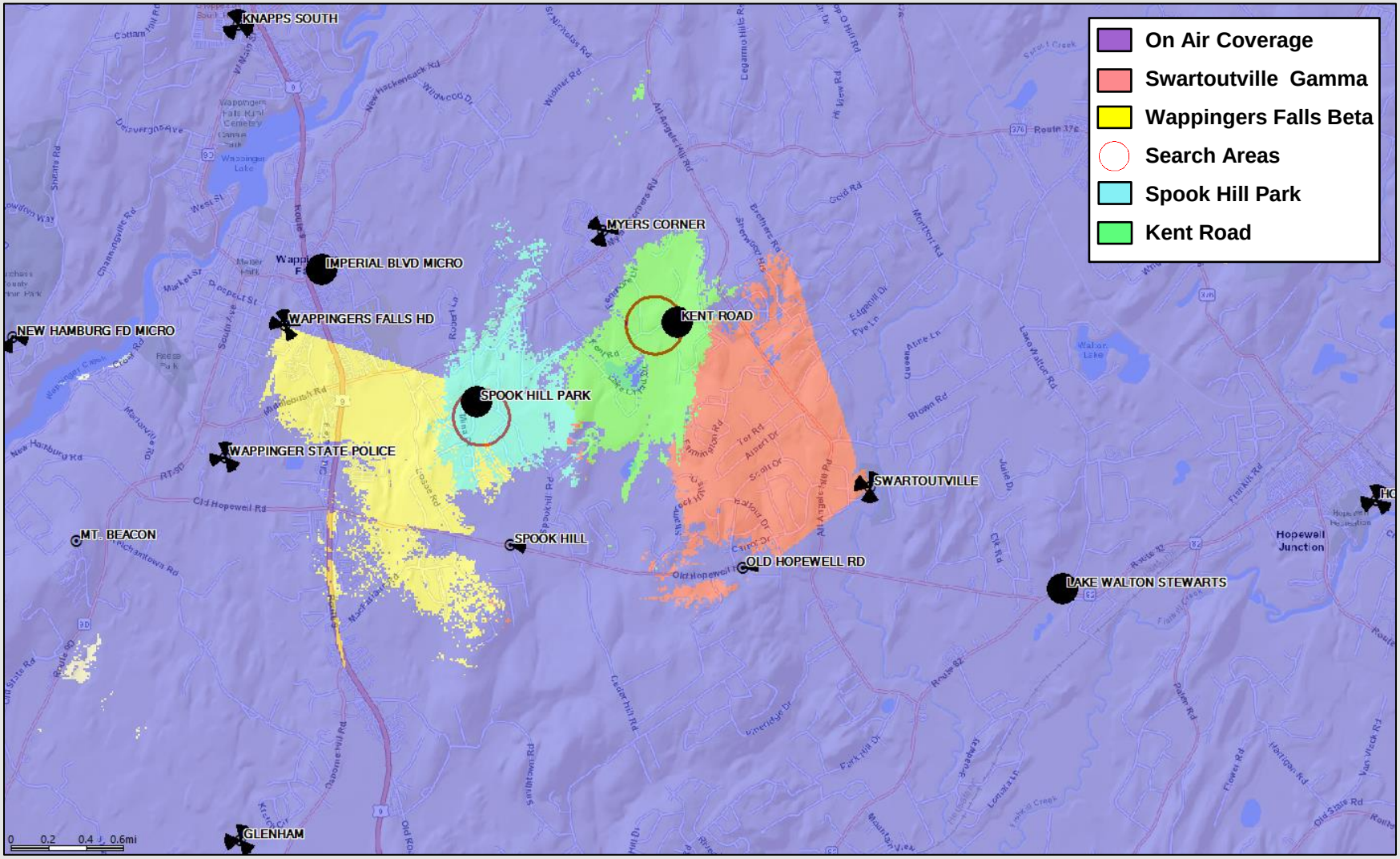


The map above adds the low band footprint of the proposed **Kent Road** and **Spook Hill Park** sites in green and light blue respectively. The green and light blue best server footprints provide improved coverage and capacity throughout the identified significant gap areas. This will help to resolve the coverage and capacity issues impacting **Swartoutville** Gamma and **Wappingers Falls** Beta sectors.

verizon

# Existing 700MHz Coverage

This coverage map shows how weak the RF conditions are in and around the Kent Road and Spook Hill Park site areas.
*Refer to slide 10 for further explanation of these color thresholds*

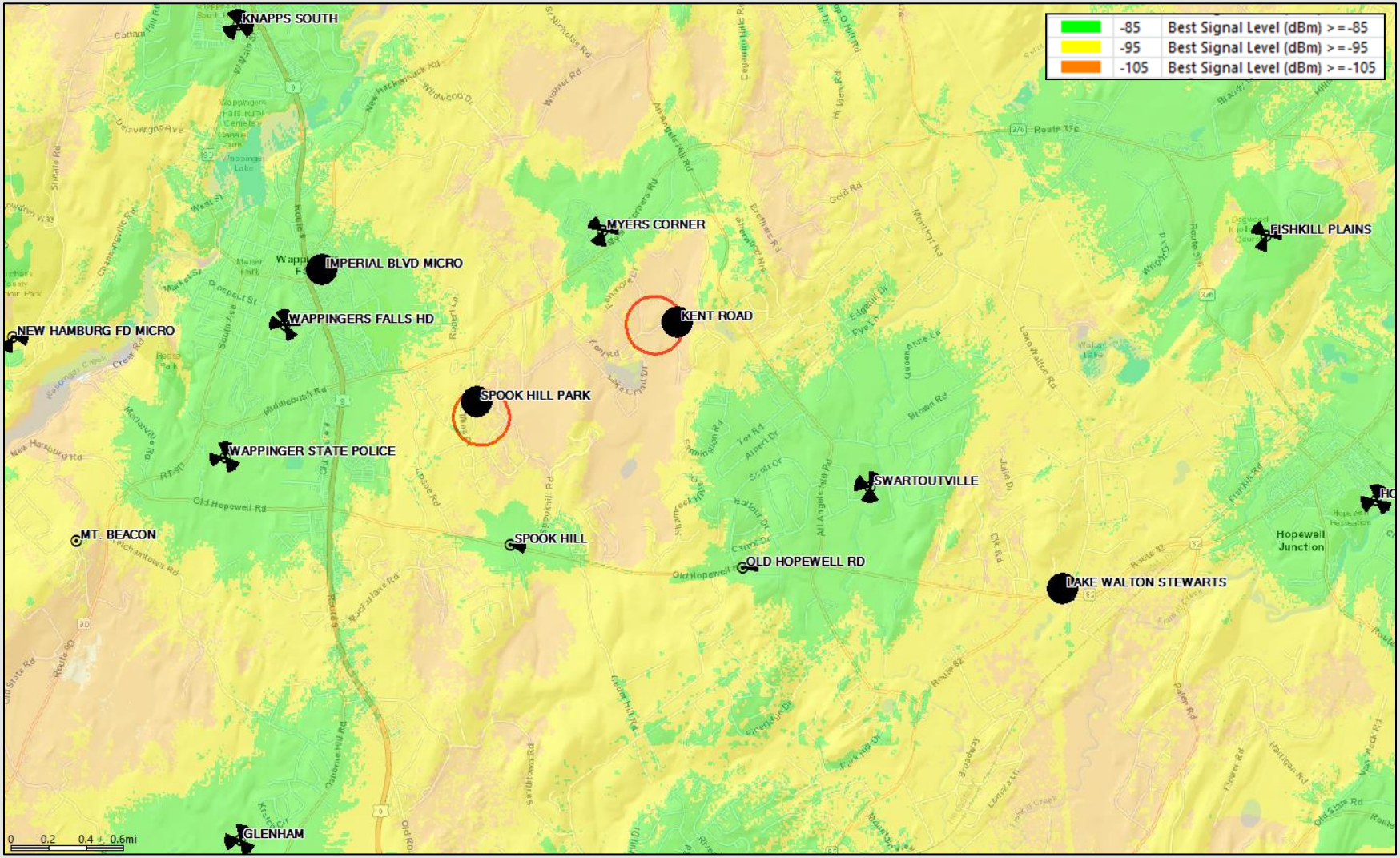


The map above represents existing low band signal strength coverage from existing sites.

verizon

# Proposed 700MHz Coverage

This coverage map shows how improved the RF conditions will be in and around the Kent Road and Spook Hill Park site areas.
*Refer to slide 10 for further explanation of these color thresholds*

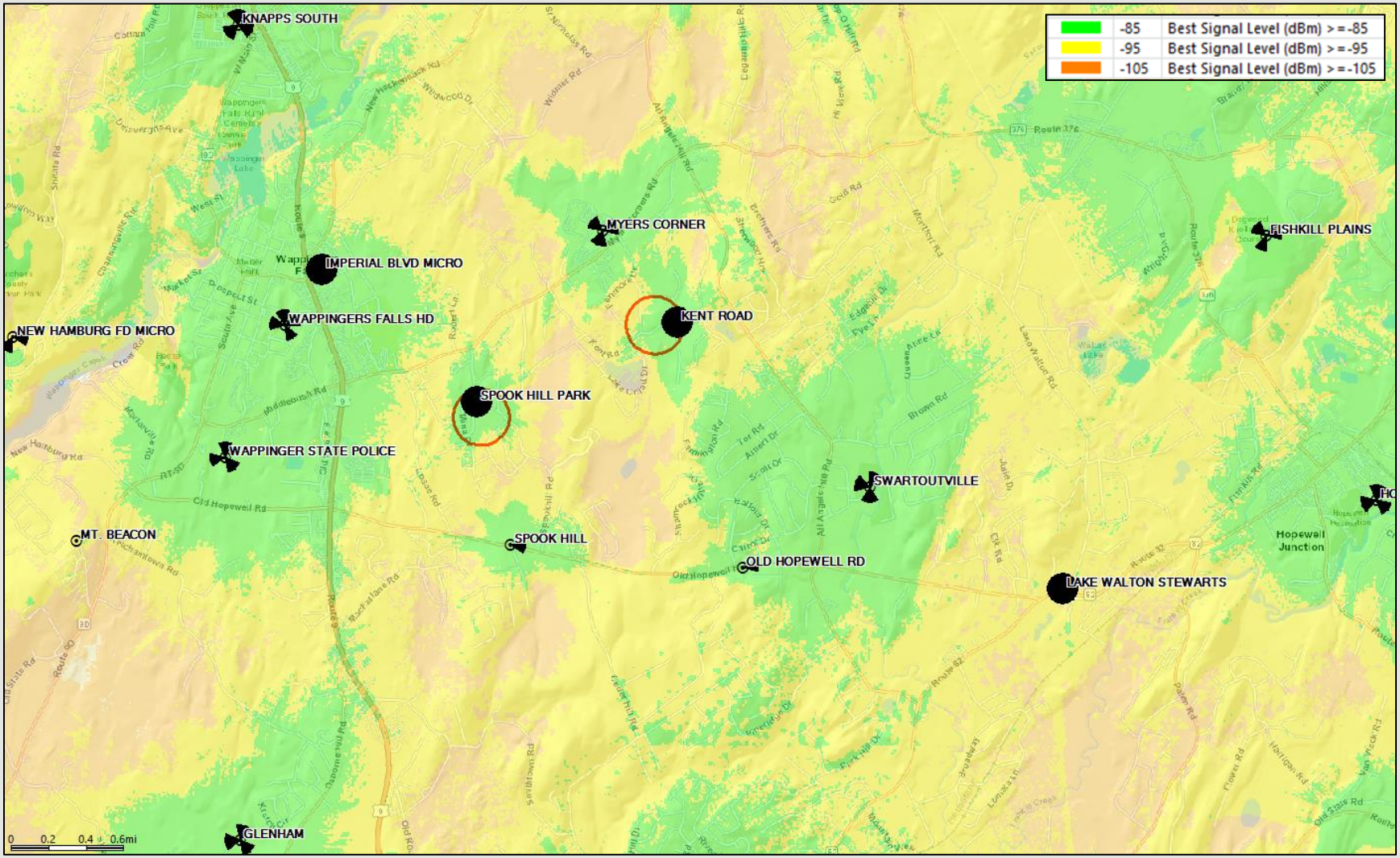


The map above adds the low band footprint of the proposed **Kent Road** and **Spook Hill Park** sites. The improved signal strength corresponds to improved coverage and capacity throughout the identified significant gap areas. This will help to resolve the coverage and capacity issues impacting **Swartoutville** Gamma and **Wappingers Falls** Beta sectors.

verizon

# Existing 2100MHz Best Server -105dBm RSRP

Best Server plots depict the actual footprint of each sector in question at one threshold so the viewer can accurately evaluate the area offloaded by the new sites dominant signal area.

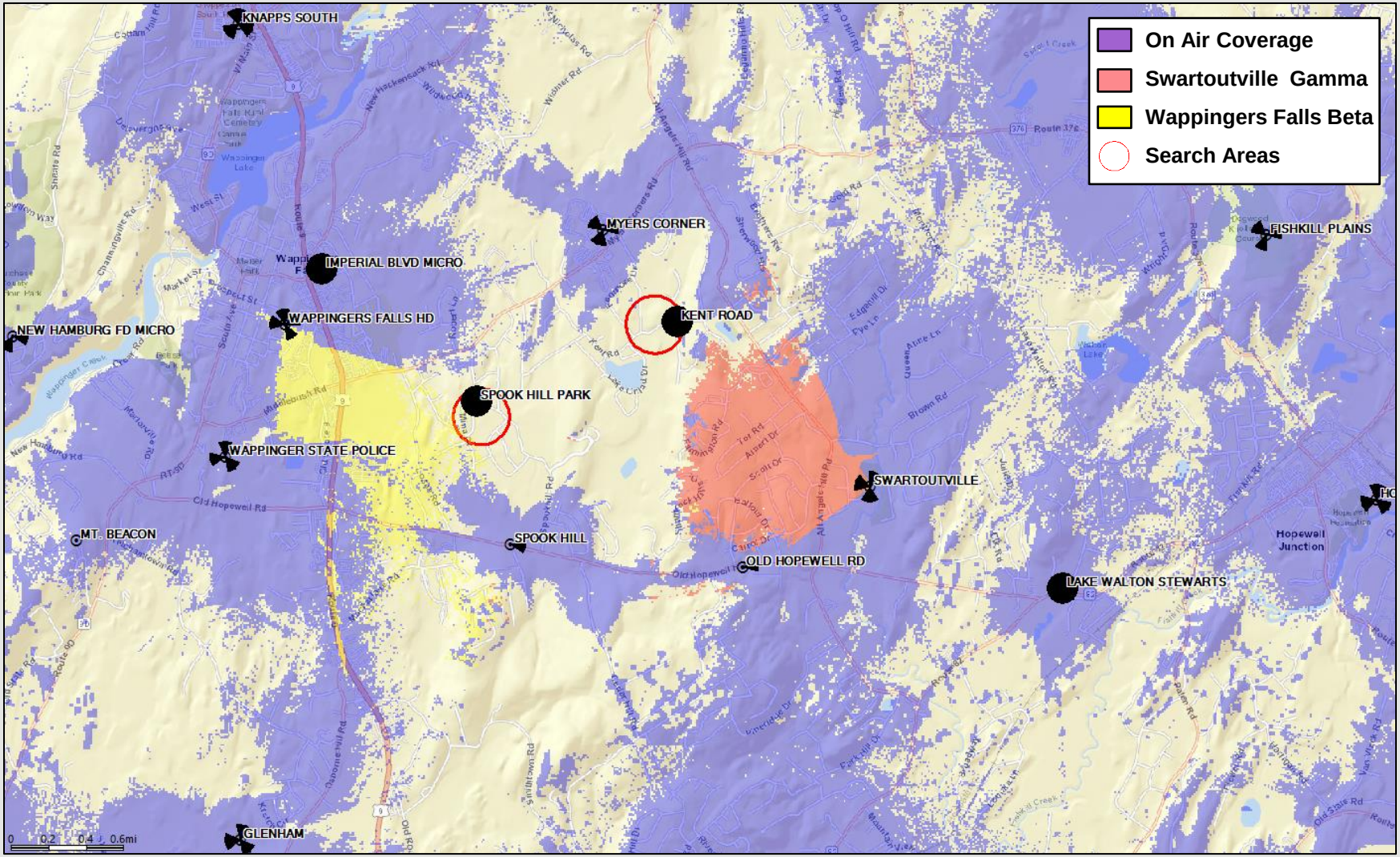


The map above represents mid band coverage from existing sites, with the sites in need of capacity offload detailed in the legend above. Blue coverage is from other on air sites.

verizon

# Proposed 2100MHz Best Server -105dBm RSRP

Best Server plots depict the actual footprint of each sector in question at one threshold so the viewer can accurately evaluate the area offloaded by the new sites dominant signal area.

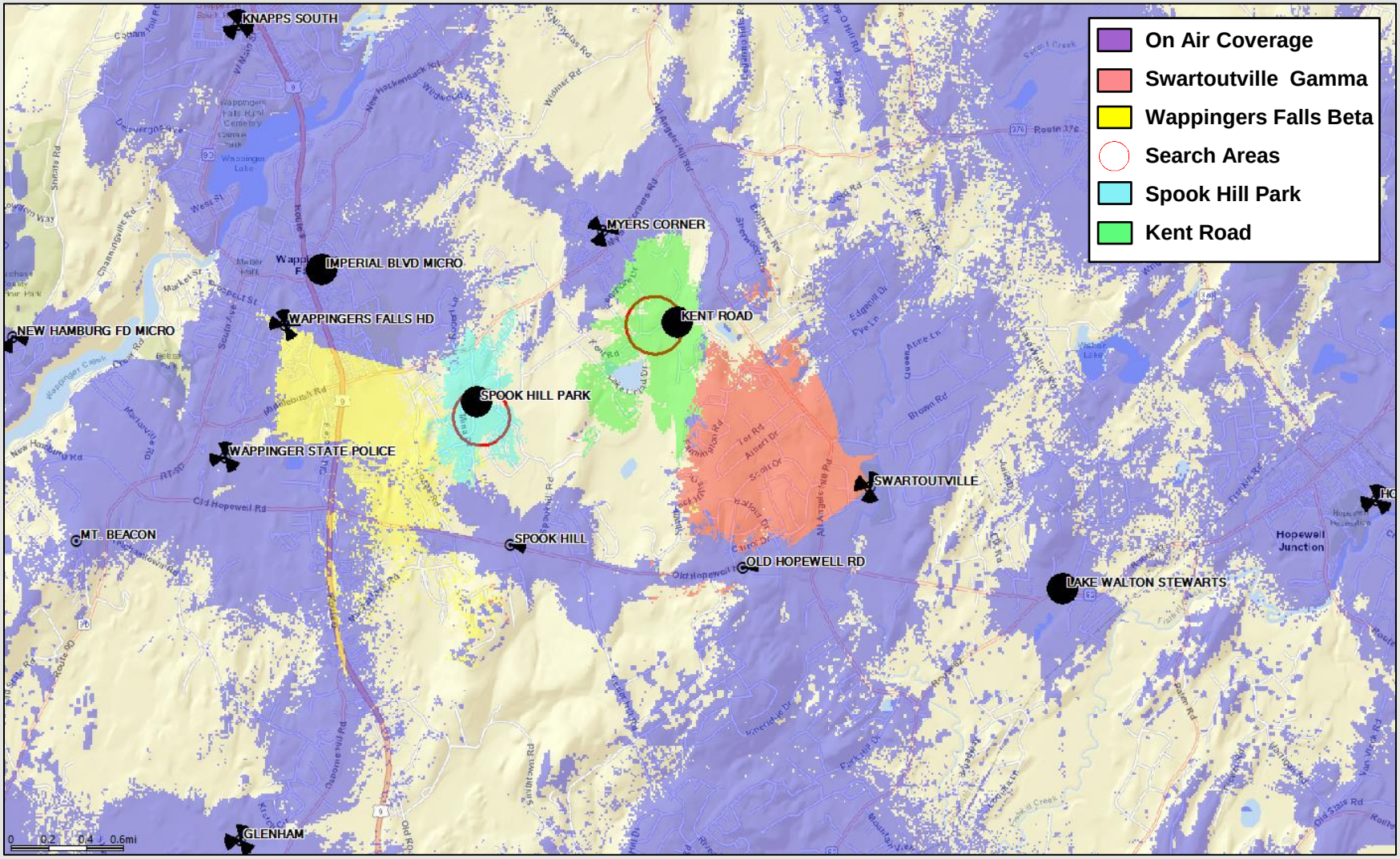


The map above adds the mid band footprint of the proposed **Kent Road** and **Spook Hill Park** sites in green and light blue respectively. The green and light blue best server footprints provide improved coverage and capacity throughout the identified significant gap areas. This will help to resolve the coverage and capacity issues impacting **Swartoutville** Gamma and **Wappingers Falls** Beta sectors.

verizon

# Existing 2100MHz Coverage

This coverage map shows the RF conditions in and around the Kent Road and Spook Hill Park site area.
*Refer to slide 10 for further explanation of these color thresholds*

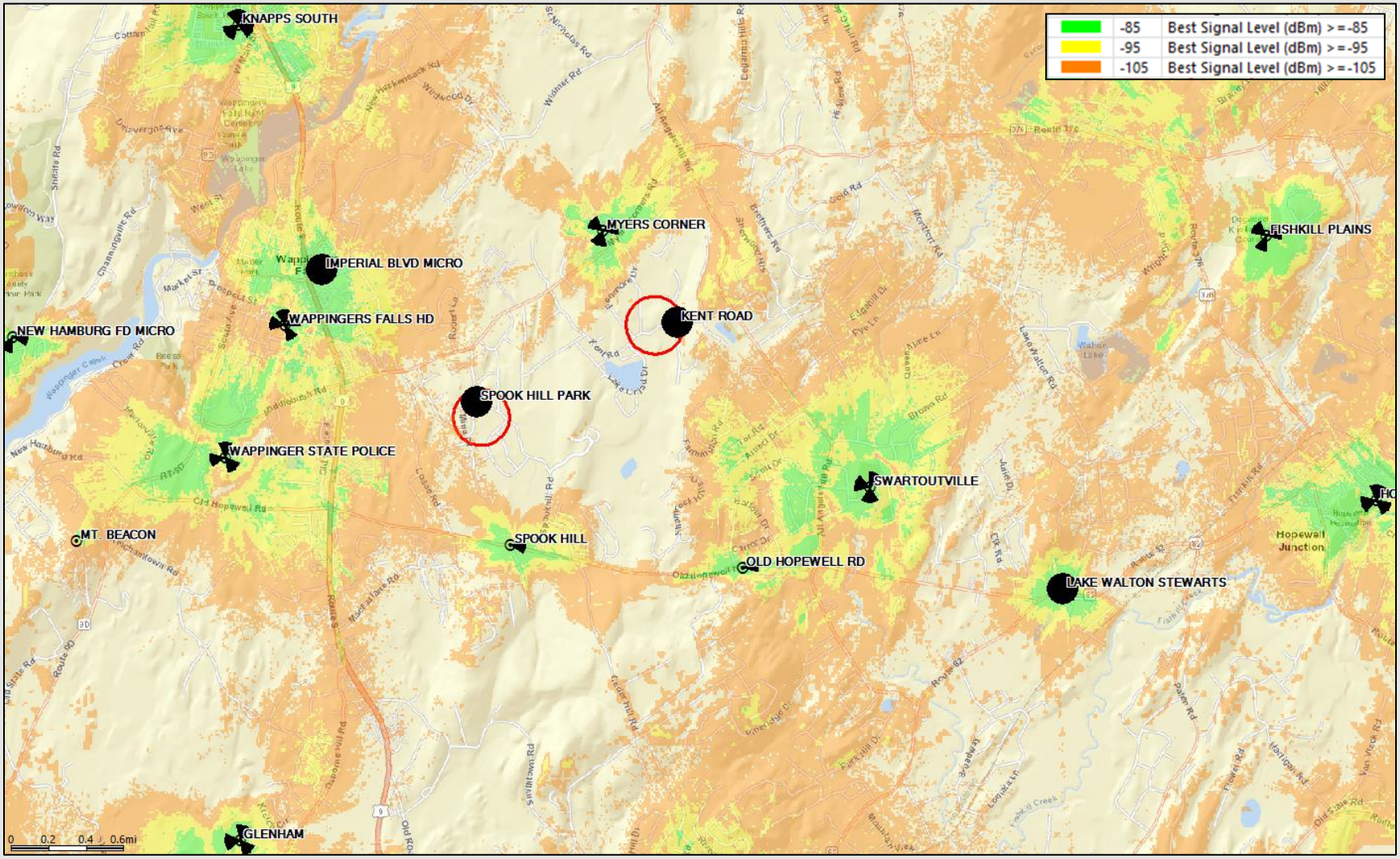


The map above represents mid band coverage from existing sites. This 2100MHz signal is very weak throughout the project area. Additional mid band network densification is required to resolve these conditions.

verizon

# Proposed 2100MHz Coverage

This coverage map shows how improved the RF conditions will be in and around the Kent Road and Spook Hill Park site area .
*Refer to slide 10 for further explanation of these color thresholds*

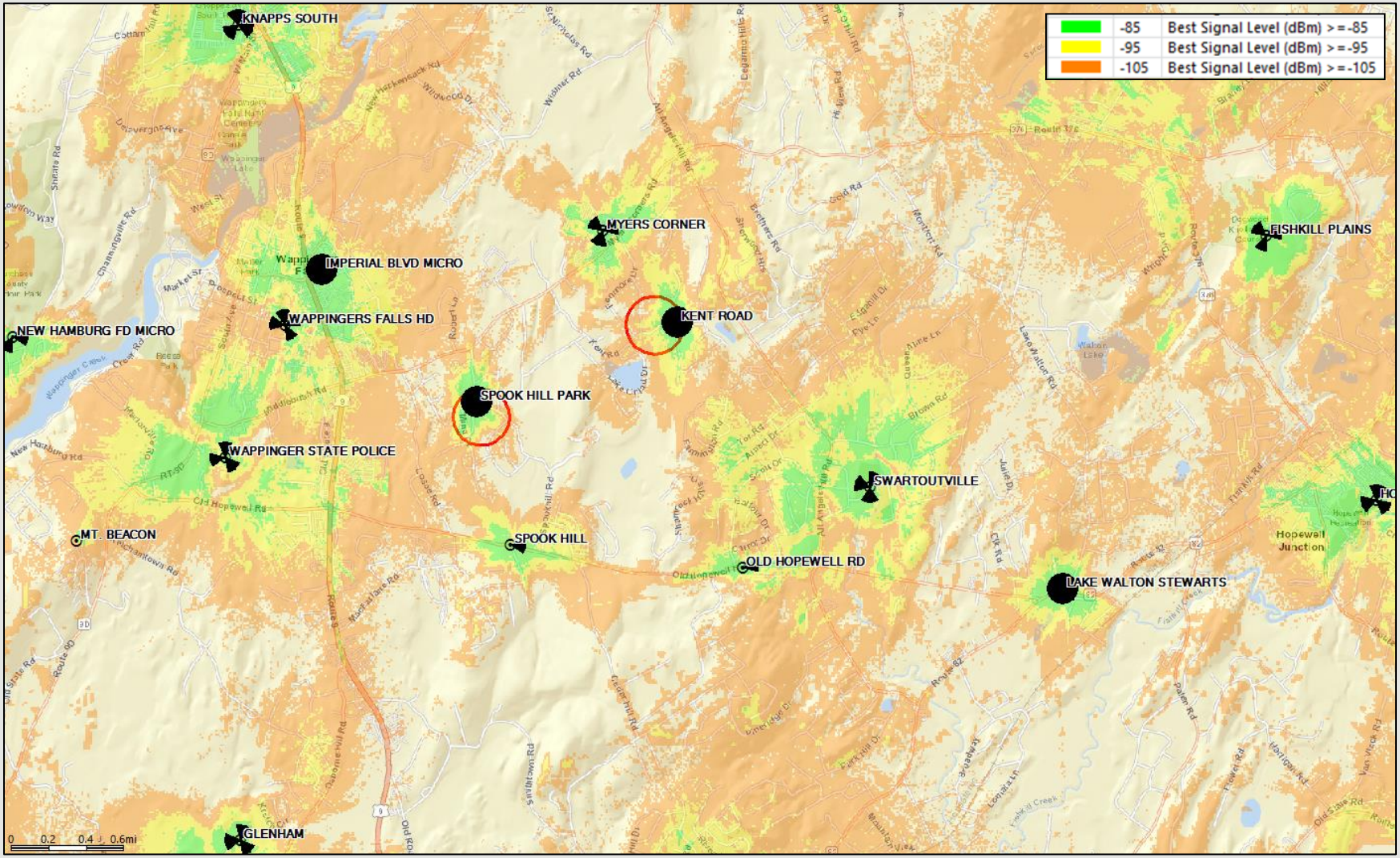


The map above adds the mid band footprint of the proposed **Kent Road** and **Spook Hill Park** sites. The improved signal strength corresponds to improved coverage and capacity throughout the identified significant gap areas. This will help to resolve the coverage and capacity issues impacting **Swartoutville** Gamma and **Wappingers Falls** Beta sectors.

verizon

# Midband coverage plots at alternate heights (Minimum Height Justification)

Mid band coverage is critical in the effort to balance capacity (utilization) and allow for “contained” low band sites. If adequate and reliable signal strength from mid band is not present the mobile will attach to low band only. Too many users in this RF condition will overburden low band and cause a site to become capacity exhausted requiring additional network densification. Areas of higher utilization are of particular importance in evaluating mid band height needs. Mid band spectrum on macro sites has proven to be a very capable resource and also includes CBRS-Band. These frequencies roughly in the 1.9-3.8GHz range are needed throughout the Kent Road and Spook Hill Park project areas.

As relative antenna height is increased or decreased, area (RF) clutter is either overcome allowing a site to propagate as needed or becomes obstructed causing gaps in service. The following slides (22-25) display existing on-air mid band coverage + Kent Road and Spook Hill Park Site at identified Antenna centerline (ACL).

# Height Justification (Mid-Band Coverage 2100MHz)

Zoomed in + increased signal strength granularity

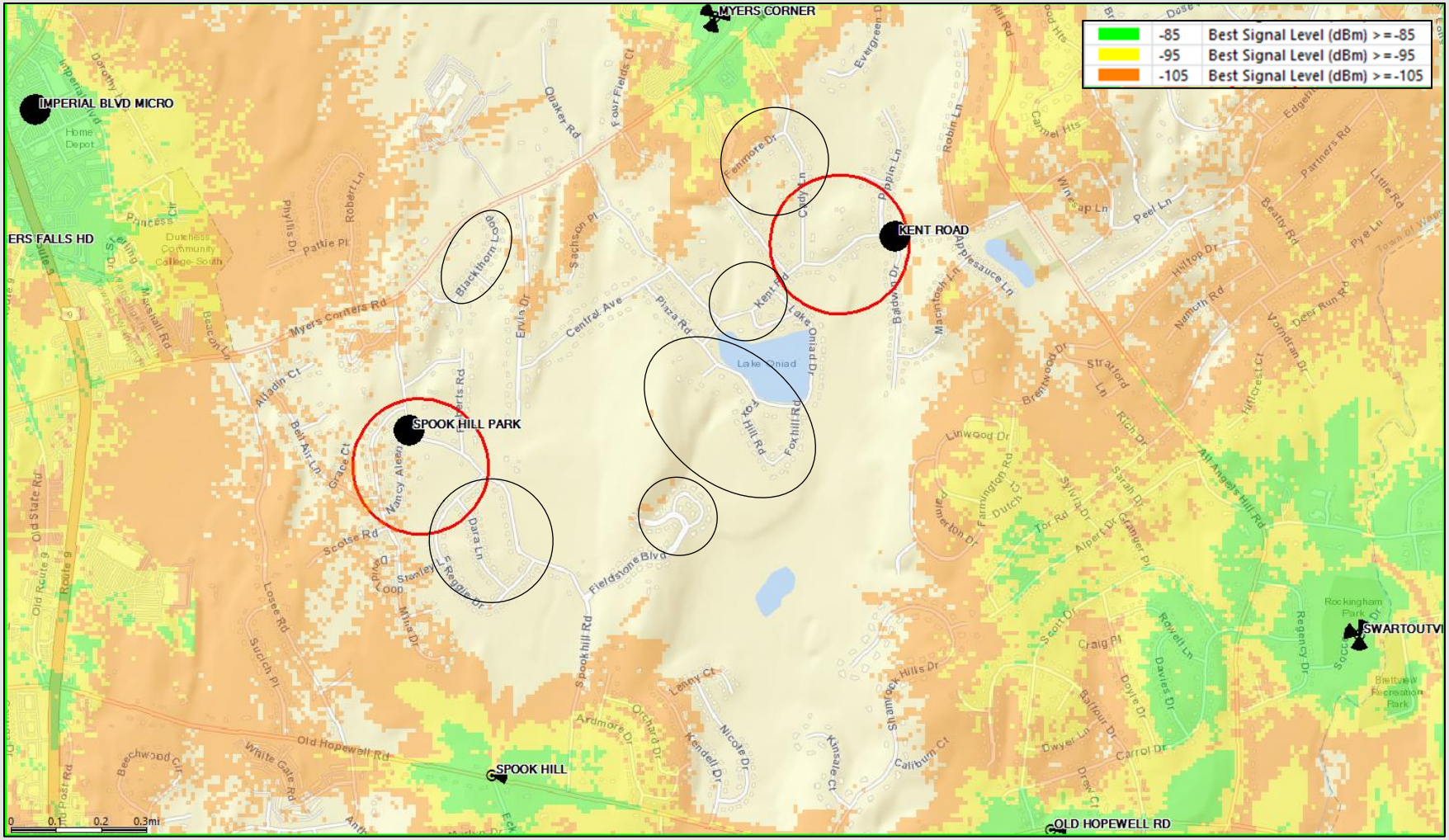


The map above represents mid band coverage from existing sites. Areas encircled are to be focused.

verizon

# Height Justification (Mid-Band Coverage 2100MHz)

Zoomed in + increased signal strength granularity

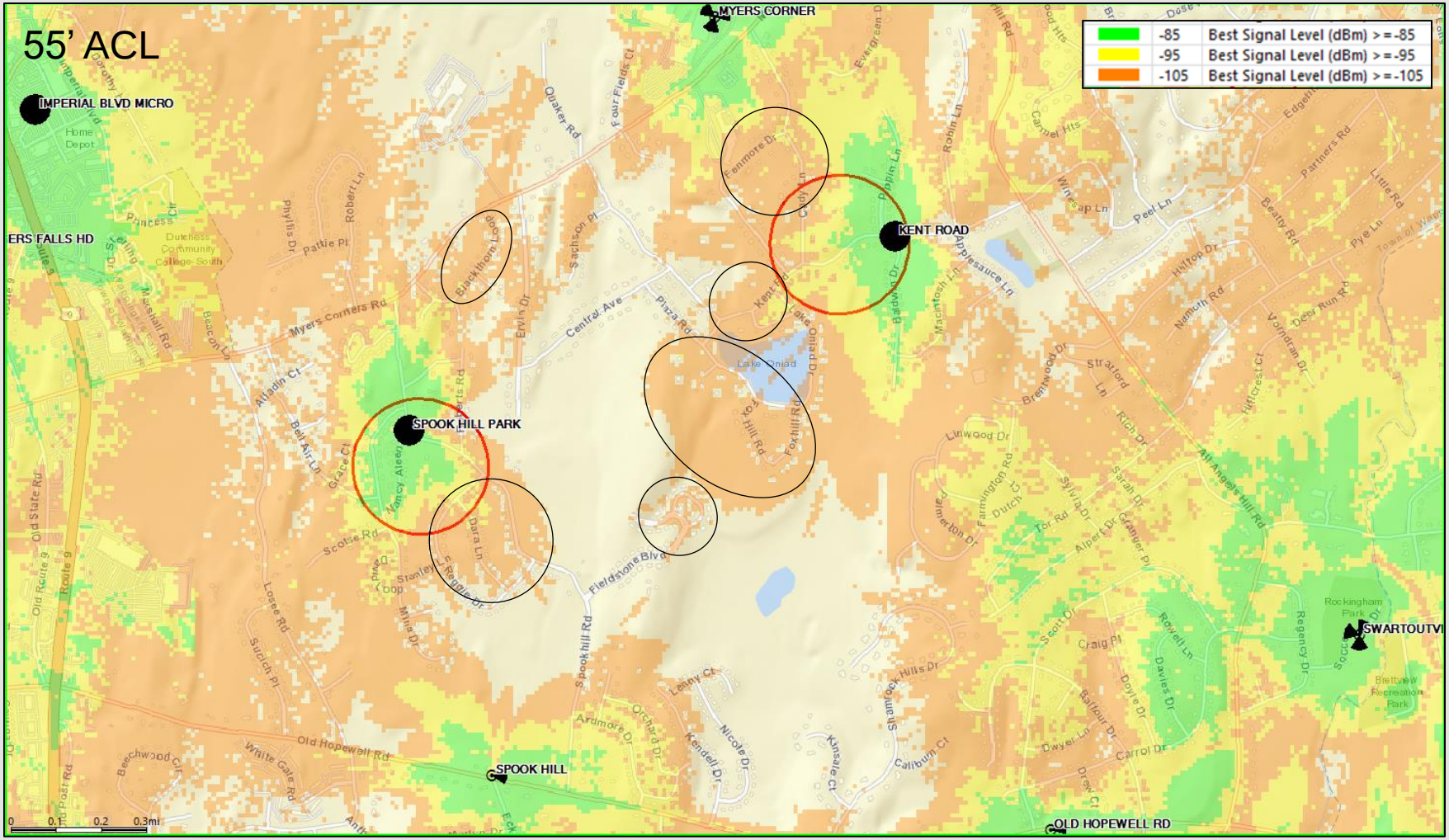


The map above represents mid band coverage from existing sites + Kent Road and Spook Hill Park site at 55' Antenna Centerline (ACL) which is 10ft higher than the proposed ACL(45'). The purpose of adding mid band coverage plot at higher ACL is to show that a higher ACL will certainly result in improved mid band coverage but in order to be in compliance with the FCC Small Cell guidelines, Verizon's antenna tip has to be under 50'

verizon

# Height Justification (Mid-Band Coverage 2100MHz)

Zoomed in + increased signal strength granularity

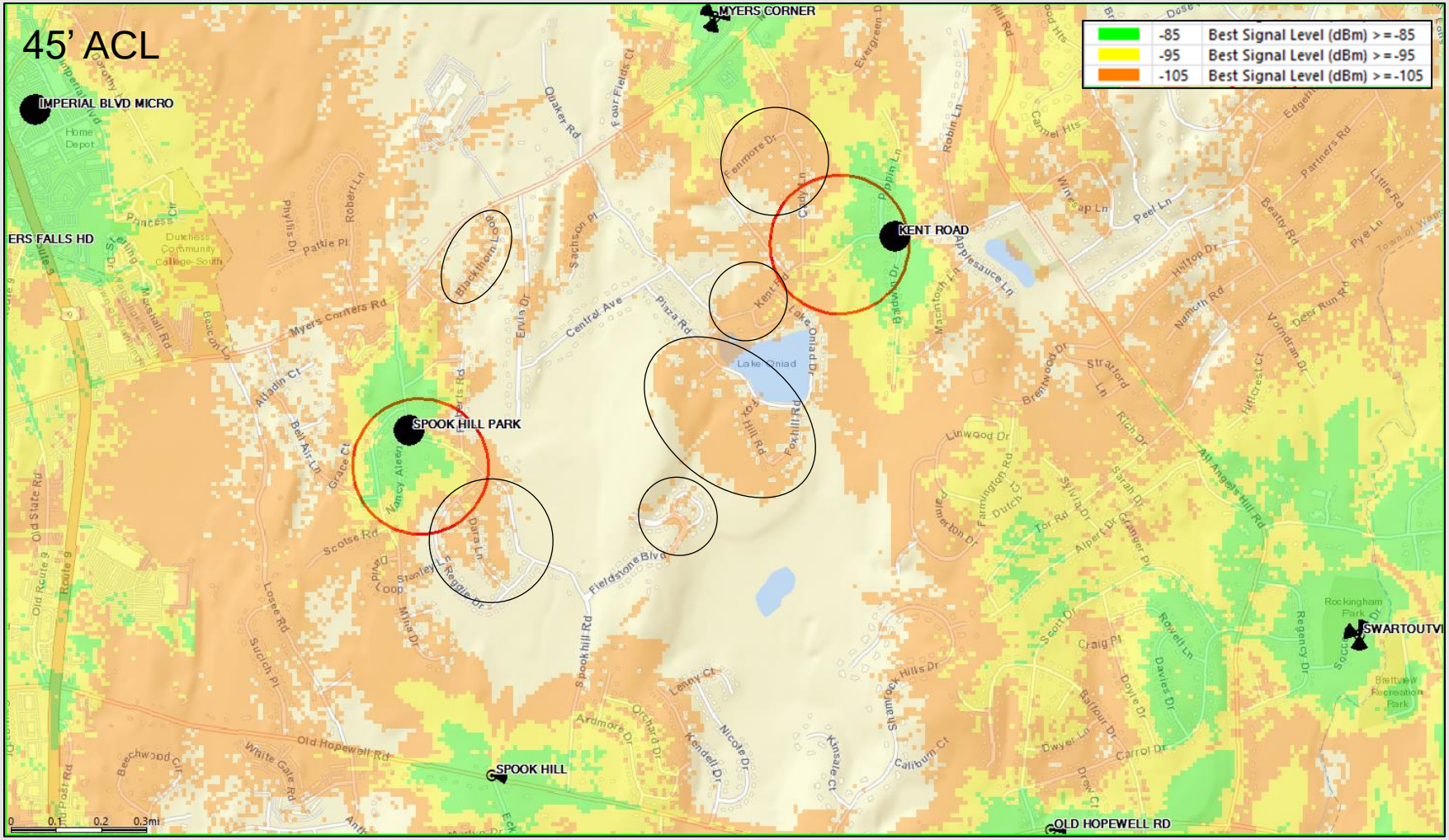


The map above represents mid band coverage from existing sites + Kent Road and Spook Hill Park site at 45'ACL. Mid-band footprint reduced at the proposed height but project areas will still have some acceptable coverage.

verizon

# Height Justification (Mid-Band Coverage 2100MHz)

Zoomed in + increased signal strength granularity

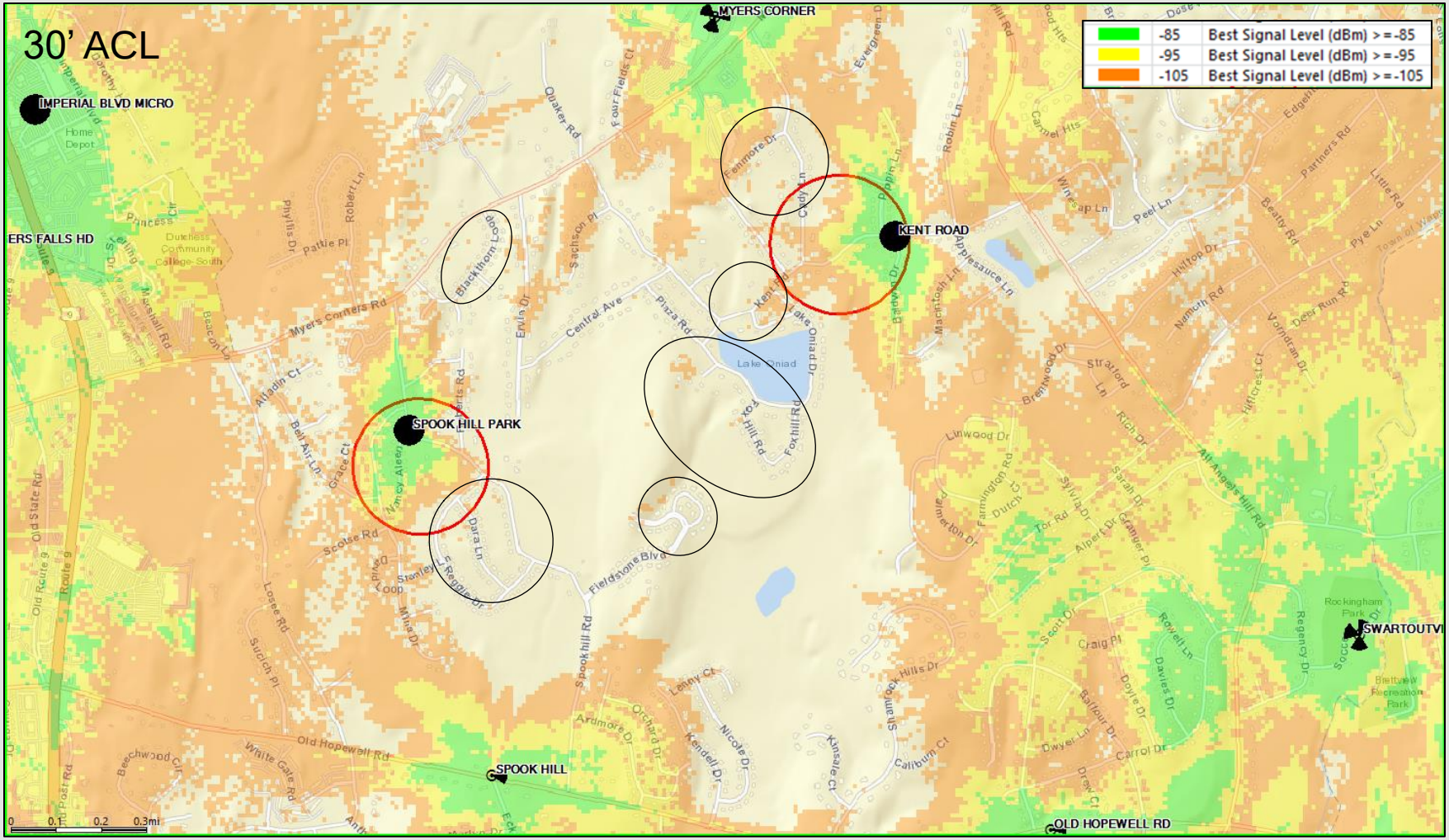


The map above represents mid band coverage from existing sites + Kent Road and Spook Hill Park site at 30'ACL (Available RAD center on the existing Utility poles). Midband footprint significantly reduced at 30'ACL and our focus areas will have either tier 4 outdoor coverage (-95dBm to -105dBm, which means no indoor midband coverage) or no midband coverage at all.

verizon

# Height Justification Narrative/Summary

As mentioned before, Kent Road and Spook Hill Park project areas are already experiencing high network utilization, primarily on low band due to lack of adequate and reliable mid band coverage in the area. Due to the high number of users in the project area, it is important to provide adequate mid band signal strength to this objective area. Verizon RF considered the town's preference to utilize the existing utility poles but any height lower than 45' will fail the capacity objectives of these projects, As shown previously 45' ACL is not as ideal for the projects as 55' would be, however it does provide acceptable coverage for the majority of the project area.

# RF Justification Summary

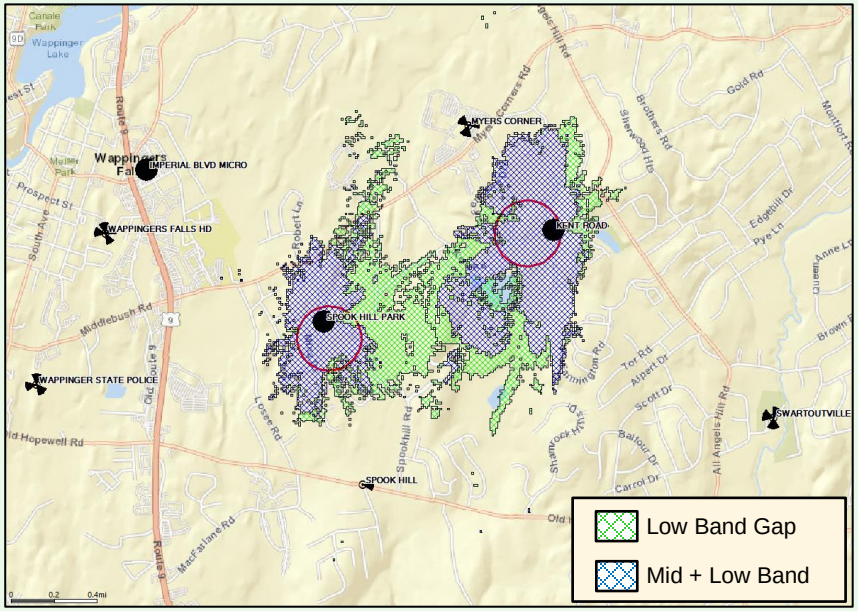


The proposed sites resolve the substantial and significant gaps in coverage and capacity impacting the Kent Road and Spook Hill Park project areas. The gaps are shown in the above graphic: The shaded areas as detailed in the legend represent gaps in coverage and capacity that Kent Road and Spook Hill Park (sites) will resolve.

The network was analyzed to determine whether there is sufficient **RF coverage and capacity** in the **Town of Wappinger**. It was determined that there are significant gaps in adequate LTE service for Verizon Wireless in 2100MHz frequency band. In addition to the coverage deficiencies, Verizon Wireless' network does not have sufficient capacity (low band or mid band) to handle the existing and projected LTE voice and data traffic in the area near and neighboring the proposed **Kent Road** and **Spook Hill Park** facilities ("targeted service improvement areas"). Based on the need for additional coverage and capacity while considering the topography and specific area requiring service, any further addition of capacity to distant existing sites does not remedy Verizon's significant gap in reliable service. Therefore, the proposed facilities are also needed to provide "**capacity relief**" to the existing nearby Verizon Wireless sites, allowing the proposed facilities and those neighboring sites to adequately serve the existing and projected capacity demand in this area.

With the existing network configuration there are significant gaps in service which restricts Verizon Wireless customers from originating, maintaining or receiving reliable calls and network access. It is our expert opinion that the proposed height will satisfy the coverage and capacity needs of Verizon Wireless and its subscribers in this portion of the **Town of Wappinger** and the **Kent Road** and **Spook Hill Park** project areas. The proposed locations depicted herein satisfy the identified service gaps and are proposed at the minimum heights necessary for adequate service.

*Wasif Sharif*

Wasif Sharif
Engineer III – RF Design
Verizon Wireless

verizon

# VERIZON WIRELESS OF THE EAST LP, d/b/a VERIZON WIRELESS

## Spook Hill Park Micro

Spook Hill Road

Town of Wappinger, NY

# REAL ESTATE SITE SELECTION REPORT
# APRIL 2023

# SITE SELECTION REPORT

Verizon Wireless proposes to install and operate a new wireless telecommunications micro cell facility located in the Town of Wappingers ROW on Spook Hill Road across from Nancy Aleen Drive. Verizon Wireless proposes to install a new 50' wood utility pole (43' above ground). All proposed telecommunications equipment will be attached to the pole.

## 1. The Search Area

The need for a new Verizon Wireless site in the Town of Wappinger is based on a comprehensive analysis prepared separately by Verizon Wireless' in-house Radio Frequency ("RF) Design Engineer. As part of that RF analysis, the Verizon Wireless RF Design Engineer developed a search area for the proposed new site. The search area is the geographical area within which a new wireless telecommunications facility is most likely to provide the required coverage and/or capacity relief. One of the purposes of the search area is to assist the site acquisition firm to focus its efforts on the particular area within which a new facility can be located to remedy the specific RF concern identified by the RF Design Engineer.

The search area for the Spook Hill Park Micro site ("Search Area") is depicted in **Figure 1**, attached hereto.

### (a) Geography & Topography

The Spook Hill Park Micro area is characterized as being a flat area along Spook Hill Rd. and the neighboring streets.

### (b) Land Use

The majority of the search area covers portions Spook Hill Road, Reggie Drive, Nancy Aleen Drive, and Mina Drive. We evaluated the existing structures within the search ring (utility poles). There were no existing rooftops within the ring for potential collocation.

### (c) Description of Figures

The following figure is provided to illustrate the different characteristics which exist within the Search Area relative to the identification of a location for a new wireless communications Micro cell. The only existing structures are CHG&E utility poles which, as discussed below, have been ruled out for potential collocation.

**Figure 1** - Search Area with candidates.

## 2. Zoning Considerations

### (a) Collocation

Verizon Wireless routinely seeks to install its antennas and equipment on an existing wireless telecommunications towers or other tall structures ("collocation"),

whenever feasible. Local communities universally favor collocation because they can minimize the number of wireless telecommunications towers in an area and many municipalities even provide for a streamlined application review process. Collocation is often listed as the highest siting priority in a local municipality's Zoning Law. In addition to the streamlined zoning application process, collocation is preferred by wireless providers because it is generally a less expensive and more efficient option, compared to construction of a new tower facility. Although section 240-81 (D)(1), gives preference to new facilities that involve collocation on an existing tower or tall structure, as noted below, the existing utility pole structures currently located witin the right of way do not meet the Verizon Wireless antenna height requirements based on CHG&E attachment standards.

## 3. Spook Hill Park Micro Search Area

After a comprehensive investigation of the Search Area, no existing towers were identified which are suitable for collocation. There are four (4) existing Central Hudson Gas and Electric ("CHG&E") utility poles that were considered for collocation. However, all were ruled out due to CHG&E attachment standards and the needed antenna centerline height. CHG&E attachment standards state; "pole top mounted antennas are not permitted on a pole with primary voltage, no exceptions". Because of this, Verizon is forced to mount the antenna on the side of the pole in between secondary power and communication lines. Example: a 40' utility pole with primary power would allow Verizon to mount the antenna at a height of 25' – 27'.

A summary of each candidate is detailed below and shown on attached **Figure 1.**

**(A) Owner: CHG&E Pole 48821 – Spook Hill Road ROW across from Reggie Drive**
Coordinates: 41.585890° -73.890658°
Pole Height - ~ 40' – 45'
AMSL- 220'
Candidate A is an existing CHG&E utility pole located in the ROW on Spook Hill Road. This has been ruled out based on CHG&E attachment standards and the desired antenna height. Verizon would not be able to mount the antenna heigh enough on the pole to meet the minimum antenna height requirement for this project (45').

**(B) Owner: CHG&E Pole 68724 – Roberts Road ROW**
Coordinates: 41.587878° -73.891735°
Pole Height - ~ 35'
AMSL- 213'
Candidate B is an existing CHG&E utility pole located in the ROW on Roberts Road. This has been ruled out based on CHG&E attachment standards and the desired antenna height. Verizon would not be able to mount the antenna heigh enough on the pole to meet the minimum antenna height requirement for this project (45').

**(C) Owner: CHG&E Pole 49310 – Spook Hill Road ROW**

Coordinates: 41.588493° -73.894271°
Pole Height- ~ 40'-45'
AMSL- 222'
Candidate C is an existing CHG&E utility pole located in the ROW on Spook Hill Road. This has been ruled out based on CHG&E attachment standards and the desired antenna height. Verizon would not be able to mount the antenna heigh enough on the pole to meet the minimum antenna height requirement for this project (45').

**(D) Owner: CHG&E Pole 49308 – Spook Hill Road ROW**

Coordinates: 41.589558° -73.894504°
Pole Height - ~ 40' – 45'
AMSL- 226'
Candidate D is an existing CHG&E utility pole located in the ROW on Spook Hill Road. This has been ruled out based on CHG&E attachment standards and the desired antenna height. Verizon would not be able to mount the antenna heigh enough on the pole to meet the minimum antenna height requirement for this project (45').

**(E) Owner: VZW Pole – Spook Hill Road ROW**

Coordinates: 41.587197° -73.893916°
Pole Height - 43' / 46.9' with antenna
AMSL- 238'
Candidate E is a proposed Verizon Wireless owned utility pole located in the town ROW off of Spook Hill Road across from Nancy Aleen Drive. This proposed pole will be 43' tall (top of the antenna at 46.9') with all telecommunications equipment attached to the pole. No equipment will be placed on the ground. The location of this pole is shown as candidate "e" in **Figure 1** below. The existing poles along Spook Hill Road are estimated to be 40'- 45' tall.

## 4. SUMMARY

Based on the foregoing, four potential poles were taken into consideration for collocation options. Due to CHG&E attachment standards for utility poles with primary lines, all four had to be ruled out. The alternative solution (candidate E) is a Verizon Wireless owned utility pole installed in the Spook Hill Road ROW.

Prepared by:

Nathan Keenan
Tectonic Engineer, Project Manager
Consultant to Verizon Wireless

# FIGURE 1

## Verizon Wireless

## Spook Hill ParkMicro
## Search Area of w/ Candidates




4867-6553-2176.2

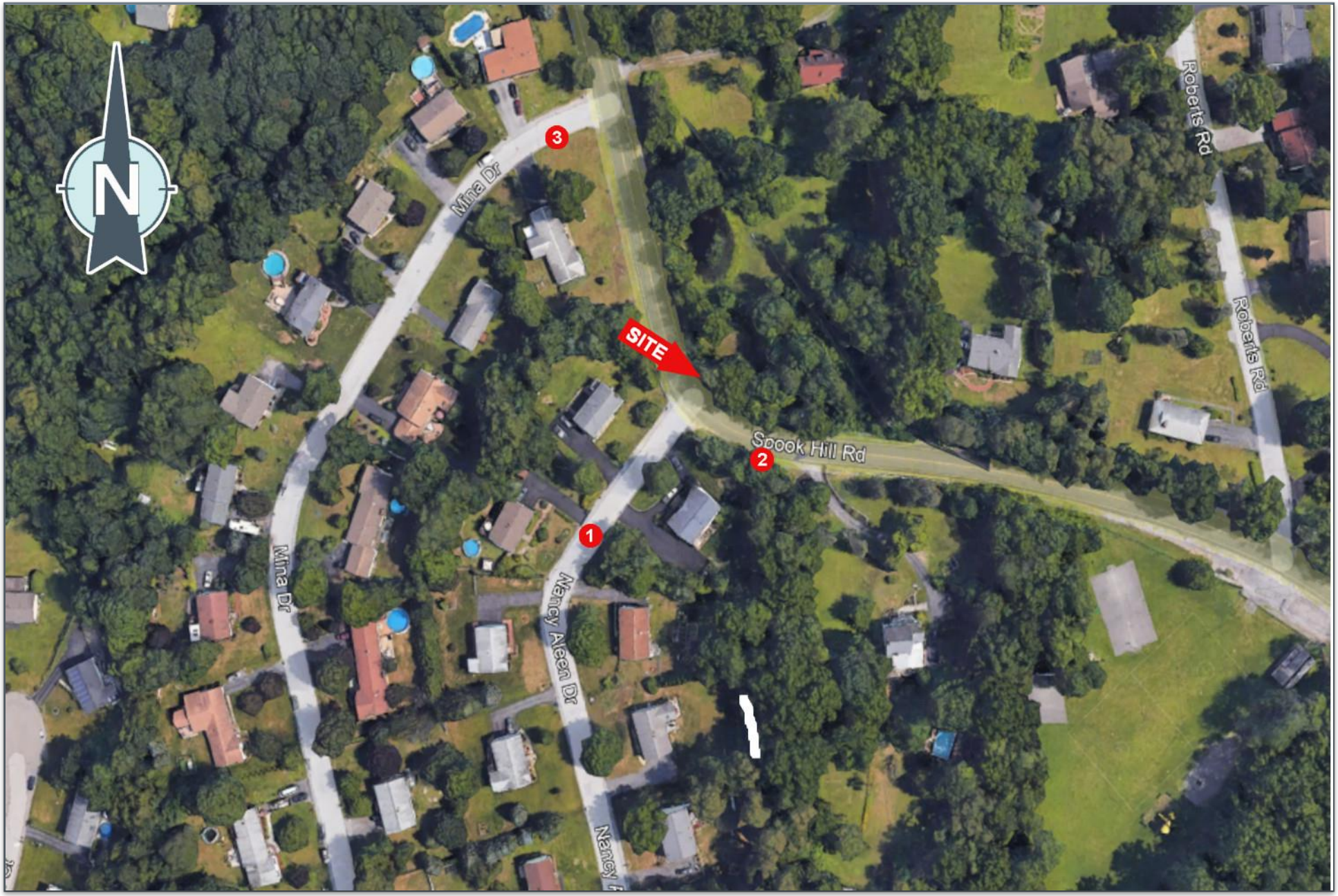


Tectonic
PRACTICAL SOLUTIONS. EXCEPTIONAL SERVICE.

**SPOOK HILL PARK**
**ADJ 15 NANCY ALEEN DRIVE**
**WAPPINGERS FALLS, NEW YORK**

PHOTO LOG
11861.002


Tectonic
PRACTICAL SOLUTIONS. EXCEPTIONAL SERVICE.

**Looking Northeast from 18 Nancy Aleen Drive.**
**The proposed utility pole will be visible from this location.**

Distance from the photographic location to the proposed site is 150'±

**P-1**

11861.002


Tectonic

PRACTICAL SOLUTIONS. EXCEPTIONAL SERVICE.

**Looking Northeast from 18 Nancy Aleen Drive.**
**The proposed utility pole will be visible from this location.**

Distance from the photographic location to the proposed site is 150'±

S-1

11861.002

Tectonic

PRACTICAL SOLUTIONS. EXCEPTIONAL SERVICE.

**Looking Northwest from the utility pole next to 18 Nancy Aleen Dr (on Spook Hill Rd).**
**The proposed utility pole will be visible from this location.**

Distance from the photographic location to the proposed site is 160'±

P-2

11861.002

Tectonic

PRACTICAL SOLUTIONS. EXCEPTIONAL SERVICE.

**Looking Northwest from the utility pole next to 18 Nancy Aleen Dr (on Spook Hill Rd).**
**The proposed utility pole will be visible from this location.**

Distance from the photographic location to the proposed site is 160'±

S-2

11861.002


Tectonic
PRACTICAL SOLUTIONS. EXCEPTIONAL SERVICE.

**Looking Southeast from 1 Mina Drive.**
**The proposed utility pole will be visible from this location.**

Distance from the photographic location to the proposed site is 300'±

P-3

11861.002


Tectonic
PRACTICAL SOLUTIONS. EXCEPTIONAL SERVICE.

**Looking Southeast from 1 Mina Drive.**
**The proposed utility pole will be visible from this location.**

Distance from the photographic location to the proposed site is 300'±

S-3

11861.002

## Instructions for Completing Part 1

**Part 1 is to be completed by the applicant or project sponsor.** Responses become part of the application for approval or funding, are subject to public review, and may be subject to further verification.

Complete Part 1 based on information currently available. If additional research or investigation would be needed to fully respond to any item, please answer as thoroughly as possible based on current information; indicate whether missing information does not exist, or is not reasonably available to the sponsor; and, when possible, generally describe work or studies which would be necessary to update or fully develop that information.

Applicants/sponsors must complete all items in Sections A & B. In Sections C, D & E, most items contain an initial question that must be answered either "Yes" or "No". If the answer to the initial question is "Yes", complete the sub-questions that follow. If the answer to the initial question is "No", proceed to the next question. Section F allows the project sponsor to identify and attach any additional information. Section G requires the name and signature of the applicant or project sponsor to verify that the information contained in Part 1is accurate and complete.

### A. Project and Applicant/Sponsor Information.

| | | |
|---|---|---|
| Name of Action or Project:<br>Bell Atlantic Mobile Systems LLC, d/b/a Verizon Wireless - Unmanned Wireless Facility - "Spook Hill Park" | | |
| Project Location (describe, and attach a general location map):<br>15 Nancy Aleen Dr, Town of Wappinger, Dutchess County, NY 12590 | | |
| Brief Description of Proposed Action (include purpose or need):<br>Bell Atlantic Mobile Systems LLC d/b/a Verizon Wireless ("Verizon Wireless" or "Applicant") proposes the installation of an unmanned wireless communications facility on a proposed wood pole on Spook Hill Road. The proposed subject pole is located on the east side of the intersection of Spook Hill Road and Nancy Aleen Drive.<br><br>In general, the installation will consist of the following: One (1) antenna to be mounted at a centerline height of 45.5' above grade on a proposed 43' tall wood pole. All accessory equipment, cabling and utility services (power and fiber) are to be mounted to the wood pole. | | |
| Name of Applicant/Sponsor:<br>Bell Atlantic Mobile Systems LLC, d/b/a Verizon Wireless; attn: Kathy Pomponio | Telephone: (518) 321-5435<br>E-Mail: kathy.pomponio@verizonwireless.com | |
| Address: 1275 John Street, Suite 100 | | |
| City/PO: West Henrietta | State: NY | Zip Code: 14586 |
| Project Contact (if not same as sponsor; give name and title/role):<br>Young Sommer LLC; attn: Scott Olson, esq. | Telephone: (518) 438-9907<br>E-Mail: solson@youngsommer.com | |
| Address:<br>5 Palisades Drive | | |
| City/PO:<br>Albany | State:<br>NY | Zip Code:<br>12205 |
| Property Owner (if not same as sponsor):<br>Town of Wappinger | Telephone: (845) 297-4158<br>E-Mail: | |
| Address:<br>20 Middlebush Rd | | |
| City/PO: Wappingers Falls | State: NY | Zip Code: 12590 |

**B. Government Approvals**

**B. Government Approvals, Funding, or Sponsorship.** ("Funding" includes grants, loans, tax relief, and any other forms of financial assistance.)

| Government Entity | If Yes: Identify Agency and Approval(s) Required | Application Date (Actual or projected) |
|---|---|---|
| a. City Council, Town Board, or Village Board of Trustees ☐Yes ☑No | | |
| b. City, Town or Village Planning Board or Commission ☑Yes ☐No | Planning Board: Special Permit & Site Plan Approval | TBD |
| c. City, Town or Village Zoning Board of Appeals ☐Yes ☑No | | |
| d. Other local agencies ☑Yes ☐No | Building Department: Work Permit | TBD |
| e. County agencies ☐Yes ☑No | | |
| f. Regional agencies ☐Yes ☑No | | |
| g. State agencies ☐Yes ☑No | | |
| h. Federal agencies ☐Yes ☑No | | |

i. Coastal Resources.

*i.* Is the project site within a Coastal Area, or the waterfront area of a Designated Inland Waterway? ☐Yes ☑No

*ii.* Is the project site located in a community with an approved Local Waterfront Revitalization Program? ☐Yes ☑No

*iii.* Is the project site within a Coastal Erosion Hazard Area? ☐Yes ☑No

**C. Planning and Zoning**

**C.1. Planning and zoning actions.**

Will administrative or legislative adoption, or amendment of a plan, local law, ordinance, rule or regulation be the only approval(s) which must be granted to enable the proposed action to proceed? ☐Yes ☑No

- **If Yes,** complete sections C, F and G.
- **If No,** proceed to question C.2 and complete all remaining sections and questions in Part 1

**C.2. Adopted land use plans.**

a. Do any municipally- adopted (city, town, village or county) comprehensive land use plan(s) include the site where the proposed action would be located? ☐Yes ☑No

If Yes, does the comprehensive plan include specific recommendations for the site where the proposed action would be located? ☐Yes ☐No

b. Is the site of the proposed action within any local or regional special planning district (for example: Greenway; Brownfield Opportunity Area (BOA); designated State or Federal heritage area; watershed management plan; or other?) ☐Yes ☑No

If Yes, identify the plan(s):

c. Is the proposed action located wholly or partially within an area listed in an adopted municipal open space plan, or an adopted municipal farmland protection plan? ☐Yes ☑No

If Yes, identify the plan(s):

**C.3. Zoning**

a. Is the site of the proposed action located in a municipality with an adopted zoning law or ordinance. ☑ Yes ☐ No
If Yes, what is the zoning classification(s) including any applicable overlay district?
R-20

b. Is the use permitted or allowed by a special or conditional use permit? ☑ Yes ☐ No

c. Is a zoning change requested as part of the proposed action? ☐ Yes ☑ No
If Yes,
*i.* What is the proposed new zoning for the site? _____

**C.4. Existing community services.**

a. In what school district is the project site located? Wappingers Central School District

b. What police or other public protection forces serve the project site?
New York State Police, Dutchess County Sherrif

c. Which fire protection and emergency medical services serve the project site?
Hughsonville Fire Co

d. What parks serve the project site?
Spook Hill Park

**D. Project Details**

**D.1. Proposed and Potential Development**

a. What is the general nature of the proposed action (e.g., residential, industrial, commercial, recreational; if mixed, include all components)? Unmanned wireless telecommunications facilty

b. a. Total acreage of the site of the proposed action? 0.001 acres
b. Total acreage to be physically disturbed? 0.001 acres
c. Total acreage (project site and any contiguous properties) owned or controlled by the applicant or project sponsor? 0.001 acres

c. Is the proposed action an expansion of an existing project or use? ☐ Yes ☑ No
*i.* If Yes, what is the approximate percentage of the proposed expansion and identify the units (e.g., acres, miles, housing units, square feet)? % _____ Units: _____

d. Is the proposed action a subdivision, or does it include a subdivision? ☐ Yes ☑ No
If Yes,
*i.* Purpose or type of subdivision? (e.g., residential, industrial, commercial; if mixed, specify types)
_____
*ii.* Is a cluster/conservation layout proposed? ☐ Yes ☐ No
*iii.* Number of lots proposed? _____
*iv.* Minimum and maximum proposed lot sizes? Minimum _____ Maximum _____

e. Will the proposed action be constructed in multiple phases? ☐ Yes ☑ No
*i.* If No, anticipated period of construction: 2 months
*ii.* If Yes:
- Total number of phases anticipated _____
- Anticipated commencement date of phase 1 (including demolition) _____ month _____ year
- Anticipated completion date of final phase _____ month _____year
- Generally describe connections or relationships among phases, including any contingencies where progress of one phase may determine timing or duration of future phases: _____

f. Does the project include new residential uses? ☐ Yes ☑ No
If Yes, show numbers of units proposed.

| | One Family | Two Family | Three Family | Multiple Family (four or more) |
|---|---|---|---|---|
| Initial Phase | _____ | _____ | _____ | _____ |
| At completion of all phases | _____ | _____ | _____ | _____ |

g. Does the proposed action include new non-residential construction (including expansions)? ☑ Yes ☐ No
If Yes,
*i.* Total number of structures 1(wood pole)
*ii.* Dimensions (in feet) of largest proposed structure: 43' height; 1.5' width; and _____ length
*iii.* Approximate extent of building space to be heated or cooled: 0 square feet

h. Does the proposed action include construction or other activities that will result in the impoundment of any liquids, such as creation of a water supply, reservoir, pond, lake, waste lagoon or other storage? ☐ Yes ☑ No
If Yes,
*i.* Purpose of the impoundment: _____
*ii.* If a water impoundment, the principal source of the water: ☐ Ground water ☐ Surface water streams ☐ Other specify:
_____
*iii.* If other than water, identify the type of impounded/contained liquids and their source.
_____
*iv.* Approximate size of the proposed impoundment. Volume: _____ million gallons; surface area: _____ acres
*v.* Dimensions of the proposed dam or impounding structure: _____ height; _____ length
*vi.* Construction method/materials for the proposed dam or impounding structure (e.g., earth fill, rock, wood, concrete):
_____

**D.2. Project Operations**

a. Does the proposed action include any excavation, mining, or dredging, during construction, operations, or both? (Not including general site preparation, grading or installation of utilities or foundations where all excavated materials will remain onsite) ☐ Yes ☑ No
If Yes:
*i* .What is the purpose of the excavation or dredging? _____
*ii.* How much material (including rock, earth, sediments, etc.) is proposed to be removed from the site?
- Volume (specify tons or cubic yards): _____
- Over what duration of time? _____

*iii.* Describe nature and characteristics of materials to be excavated or dredged, and plans to use, manage or dispose of them.
_____
_____
*iv.* Will there be onsite dewatering or processing of excavated materials? ☐ Yes ☐ No
If yes, describe. _____
_____
*v.* What is the total area to be dredged or excavated? _____ acres
*vi.* What is the maximum area to be worked at any one time? _____ acres
*vii.* What would be the maximum depth of excavation or dredging? _____ feet
*viii.* Will the excavation require blasting? ☐ Yes ☐ No
*ix.* Summarize site reclamation goals and plan: _____
_____
_____

b. Would the proposed action cause or result in alteration of, increase or decrease in size of, or encroachment into any existing wetland, waterbody, shoreline, beach or adjacent area? ☐ Yes ☑ No
If Yes:
*i.* Identify the wetland or waterbody which would be affected (by name, water index number, wetland map number or geographic description): _____
_____

*ii.* Describe how the proposed action would affect that waterbody or wetland, e.g. excavation, fill, placement of structures, or alteration of channels, banks and shorelines. Indicate extent of activities, alterations and additions in square feet or acres:

_____

_____

_____

_____

*iii.* Will the proposed action cause or result in disturbance to bottom sediments? ☐Yes ☐No

If Yes, describe: _____

*iv.* Will the proposed action cause or result in the destruction or removal of aquatic vegetation? ☐Yes ☐No

If Yes:

- acres of aquatic vegetation proposed to be removed: _____
- expected acreage of aquatic vegetation remaining after project completion: _____
- purpose of proposed removal (e.g. beach clearing, invasive species control, boat access): _____

  _____
- proposed method of plant removal: _____
- if chemical/herbicide treatment will be used, specify product(s): _____

*v.* Describe any proposed reclamation/mitigation following disturbance: _____

_____

c. Will the proposed action use, or create a new demand for water? ☐Yes ☑No

If Yes:

*i.* Total anticipated water usage/demand per day: _____ gallons/day

*ii.* Will the proposed action obtain water from an existing public water supply? ☐Yes ☐No

If Yes:

- Name of district or service area: _____
- Does the existing public water supply have capacity to serve the proposal? ☐Yes ☐No
- Is the project site in the existing district? ☐Yes ☐No
- Is expansion of the district needed? ☐Yes ☐No
- Do existing lines serve the project site? ☐Yes ☐No

*iii.* Will line extension within an existing district be necessary to supply the project? ☐Yes ☐No

If Yes:

- Describe extensions or capacity expansions proposed to serve this project: _____

  _____
- Source(s) of supply for the district: _____

*iv.* Is a new water supply district or service area proposed to be formed to serve the project site? ☐Yes ☐No

If, Yes:

- Applicant/sponsor for new district: _____
- Date application submitted or anticipated: _____
- Proposed source(s) of supply for new district: _____

*v.* If a public water supply will not be used, describe plans to provide water supply for the project: _____

_____

*vi.* If water supply will be from wells (public or private), what is the maximum pumping capacity: _____ gallons/minute.

d. Will the proposed action generate liquid wastes? ☐Yes ☑No

If Yes:

*i.* Total anticipated liquid waste generation per day: _____ gallons/day

*ii.* Nature of liquid wastes to be generated (e.g., sanitary wastewater, industrial; if combination, describe all components and approximate volumes or proportions of each): _____

_____

_____

*iii.* Will the proposed action use any existing public wastewater treatment facilities? ☐Yes ☐No

If Yes:

- Name of wastewater treatment plant to be used: _____
- Name of district: _____
- Does the existing wastewater treatment plant have capacity to serve the project? ☐Yes ☐No
- Is the project site in the existing district? ☐Yes ☐No
- Is expansion of the district needed? ☐Yes ☐No

- Do existing sewer lines serve the project site? ☐Yes ☐No
- Will a line extension within an existing district be necessary to serve the project? ☐Yes ☐No

  If Yes:
  - Describe extensions or capacity expansions proposed to serve this project: _____

*iv.* Will a new wastewater (sewage) treatment district be formed to serve the project site? ☐Yes ☐No

If Yes:
- Applicant/sponsor for new district: _____
- Date application submitted or anticipated: _____
- What is the receiving water for the wastewater discharge? _____

*v.* If public facilities will not be used, describe plans to provide wastewater treatment for the project, including specifying proposed receiving water (name and classification if surface discharge or describe subsurface disposal plans):

_____

*vi.* Describe any plans or designs to capture, recycle or reuse liquid waste: _____

e. Will the proposed action disturb more than one acre and create stormwater runoff, either from new point sources (i.e. ditches, pipes, swales, curbs, gutters or other concentrated flows of stormwater) or non-point source (i.e. sheet flow) during construction or post construction? ☐Yes ☑No

If Yes:

*i.* How much impervious surface will the project create in relation to total size of project parcel?

_____ Square feet or _____ acres (impervious surface)

_____ Square feet or _____ acres (parcel size)

*ii.* Describe types of new point sources. _____

*iii.* Where will the stormwater runoff be directed (i.e. on-site stormwater management facility/structures, adjacent properties, groundwater, on-site surface water or off-site surface waters)?

_____

- If to surface waters, identify receiving water bodies or wetlands: _____
- Will stormwater runoff flow to adjacent properties? ☐Yes ☐No

*iv.* Does the proposed plan minimize impervious surfaces, use pervious materials or collect and re-use stormwater? ☐Yes ☐No

f. Does the proposed action include, or will it use on-site, one or more sources of air emissions, including fuel combustion, waste incineration, or other processes or operations? ☑Yes ☐No

If Yes, identify:

*i.* Mobile sources during project operations (e.g., heavy equipment, fleet or delivery vehicles)

N/A

*ii.* Stationary sources during construction (e.g., power generation, structural heating, batch plant, crushers)

Construction Equipment

*iii.* Stationary sources during operations (e.g., process emissions, large boilers, electric generation)

N/A

g. Will any air emission sources named in D.2.f (above), require a NY State Air Registration, Air Facility Permit, or Federal Clean Air Act Title IV or Title V Permit? ☐Yes ☑No

If Yes:

*i.* Is the project site located in an Air quality non-attainment area? (Area routinely or periodically fails to meet ambient air quality standards for all or some parts of the year) ☐Yes ☐No

*ii.* In addition to emissions as calculated in the application, the project will generate:
- _____Tons/year (short tons) of Carbon Dioxide ($CO_2$)
- _____Tons/year (short tons) of Nitrous Oxide ($N_2O$)
- _____Tons/year (short tons) of Perfluorocarbons (PFCs)
- _____Tons/year (short tons) of Sulfur Hexafluoride ($SF_6$)
- _____Tons/year (short tons) of Carbon Dioxide equivalent of Hydroflourocarbons (HFCs)
- _____Tons/year (short tons) of Hazardous Air Pollutants (HAPs)

h. Will the proposed action generate or emit methane (including, but not limited to, sewage treatment plants, landfills, composting facilities)? ☐Yes ☑No

If Yes:

*i.* Estimate methane generation in tons/year (metric): _____

*ii.* Describe any methane capture, control or elimination measures included in project design (e.g., combustion to generate heat or electricity, flaring): _____

i. Will the proposed action result in the release of air pollutants from open-air operations or processes, such as quarry or landfill operations? ☐Yes ☑No

If Yes: Describe operations and nature of emissions (e.g., diesel exhaust, rock particulates/dust):

_____

j. Will the proposed action result in a substantial increase in traffic above present levels or generate substantial new demand for transportation facilities or services? ☐Yes ☑No

If Yes:

*i.* When is the peak traffic expected (Check all that apply): ☐ Morning ☐ Evening ☐Weekend ☐ Randomly between hours of _____ to _____.

*ii.* For commercial activities only, projected number of truck trips/day and type (e.g., semi trailers and dump trucks): _____

*iii.* Parking spaces: Existing _____ Proposed _____ Net increase/decrease _____

*iv.* Does the proposed action include any shared use parking? ☐Yes ☐No

*v.* If the proposed action includes any modification of existing roads, creation of new roads or change in existing access, describe:

*vi.* Are public/private transportation service(s) or facilities available within ½ mile of the proposed site? ☐Yes ☐No

*vii* Will the proposed action include access to public transportation or accommodations for use of hybrid, electric or other alternative fueled vehicles? ☐Yes ☐No

*viii.* Will the proposed action include plans for pedestrian or bicycle accommodations for connections to existing pedestrian or bicycle routes? ☐Yes ☐No

k. Will the proposed action (for commercial or industrial projects only) generate new or additional demand for energy? ☑Yes ☐No

If Yes:

*i.* Estimate annual electricity demand during operation of the proposed action: _____

Minimal increase in electrical power usage as necessary to operate the facility

*ii.* Anticipated sources/suppliers of electricity for the project (e.g., on-site combustion, on-site renewable, via grid/local utility, or other):

N/A

*iii.* Will the proposed action require a new, or an upgrade, to an existing substation? ☐Yes ☑No

l. Hours of operation. Answer all items which apply.

*i.* During Construction:

- Monday - Friday: 8am-5pm
- Saturday: _____
- Sunday: _____
- Holidays: _____

*ii.* During Operations:

- Monday - Friday: 24 hours
- Saturday: 24 hours
- Sunday: 24 hours
- Holidays: 24 hours

m. Will the proposed action produce noise that will exceed existing ambient noise levels during construction, operation, or both? ☑ Yes ☐ No

If yes:

*i.* Provide details including sources, time of day and duration:

During construction, noise associated with the operation of construction equipment

*ii.* Will the proposed action remove existing natural barriers that could act as a noise barrier or screen? ☐ Yes ☑ No

Describe: _____

n. Will the proposed action have outdoor lighting? ☐ Yes ☑ No

If yes:

*i.* Describe source(s), location(s), height of fixture(s), direction/aim, and proximity to nearest occupied structures:

_____

*ii.* Will proposed action remove existing natural barriers that could act as a light barrier or screen? ☐ Yes ☐ No

Describe: _____

o. Does the proposed action have the potential to produce odors for more than one hour per day? ☐ Yes ☑ No

If Yes, describe possible sources, potential frequency and duration of odor emissions, and proximity to nearest occupied structures: _____

p. Will the proposed action include any bulk storage of petroleum (combined capacity of over 1,100 gallons) or chemical products 185 gallons in above ground storage or any amount in underground storage? ☐ Yes ☑ No

If Yes:

*i.* Product(s) to be stored _____

*ii.* Volume(s) _____ per unit time _____ (e.g., month, year)

*iii.* Generally, describe the proposed storage facilities: _____

q. Will the proposed action (commercial, industrial and recreational projects only) use pesticides (i.e., herbicides, insecticides) during construction or operation? ☐ Yes ☑ No

If Yes:

*i.* Describe proposed treatment(s):

_____

*ii.* Will the proposed action use Integrated Pest Management Practices? ☐ Yes ☐ No

r. Will the proposed action (commercial or industrial projects only) involve or require the management or disposal of solid waste (excluding hazardous materials)? ☐ Yes ☑ No

If Yes:

*i.* Describe any solid waste(s) to be generated during construction or operation of the facility:

- Construction: _____ tons per _____ (unit of time)
- Operation : _____ tons per _____ (unit of time)

*ii.* Describe any proposals for on-site minimization, recycling or reuse of materials to avoid disposal as solid waste:

- Construction: _____
- Operation: _____

*iii.* Proposed disposal methods/facilities for solid waste generated on-site:

- Construction: _____
- Operation: _____

s. Does the proposed action include construction or modification of a solid waste management facility? ☐ Yes ☑ No

If Yes:

*i.* Type of management or handling of waste proposed for the site (e.g., recycling or transfer station, composting, landfill, or other disposal activities): _____

*ii.* Anticipated rate of disposal/processing:

- _____ Tons/month, if transfer or other non-combustion/thermal treatment, or
- _____ Tons/hour, if combustion or thermal treatment

*iii.* If landfill, anticipated site life: _____ years

t. Will the proposed action at the site involve the commercial generation, treatment, storage, or disposal of hazardous waste? ☐ Yes ☑ No

If Yes:

*i.* Name(s) of all hazardous wastes or constituents to be generated, handled or managed at facility: _____

*ii.* Generally describe processes or activities involving hazardous wastes or constituents: _____

*iii.* Specify amount to be handled or generated _____ tons/month

*iv.* Describe any proposals for on-site minimization, recycling or reuse of hazardous constituents: _____

*v.* Will any hazardous wastes be disposed at an existing offsite hazardous waste facility? ☐ Yes ☐ No

If Yes: provide name and location of facility: _____

If No: describe proposed management of any hazardous wastes which will not be sent to a hazardous waste facility: _____

**E. Site and Setting of Proposed Action**

**E.1. Land uses on and surrounding the project site**

a. Existing land uses.

*i.* Check all uses that occur on, adjoining and near the project site.

☐ Urban ☐ Industrial ☐ Commercial ☑ Residential (suburban) ☐ Rural (non-farm)
☐ Forest ☐ Agriculture ☐ Aquatic ☐ Other (specify): _____

*ii.* If mix of uses, generally describe:

There is no substantial change in land use or covertype as part of this application. Verizon Wireless proposes to install (1) 43' tall wooden utility pole within the ROW, adjacent to existing roadway.

b. Land uses and covertypes on the project site.

| Land use or Covertype | Current Acreage | Acreage After Project Completion | Change (Acres +/-) |
|---|---|---|---|
| • Roads, buildings, and other paved or impervious surfaces | | | |
| • Forested | | | |
| • Meadows, grasslands or brushlands (non-agricultural, including abandoned agricultural) | | | < 0.001 |
| • Agricultural (includes active orchards, field, greenhouse etc.) | | | |
| • Surface water features (lakes, ponds, streams, rivers, etc.) | | | |
| • Wetlands (freshwater or tidal) | | | |
| • Non-vegetated (bare rock, earth or fill) | | | |
| • Other Describe: _____ | | | |

c. Is the project site presently used by members of the community for public recreation? ☐ Yes ☑ No

*i.* If Yes: explain: _____

d. Are there any facilities serving children, the elderly, people with disabilities (e.g., schools, hospitals, licensed day care centers, or group homes) within 1500 feet of the project site? ☐ Yes ☑ No

If Yes,

*i.* Identify Facilities:

_____

_____

e. Does the project site contain an existing dam? ☐ Yes ☑ No

If Yes:

*i.* Dimensions of the dam and impoundment:

- Dam height: _____ feet
- Dam length: _____ feet
- Surface area: _____ acres
- Volume impounded: _____ gallons OR acre-feet

*ii.* Dam's existing hazard classification: _____

*iii.* Provide date and summarize results of last inspection:

_____

_____

f. Has the project site ever been used as a municipal, commercial or industrial solid waste management facility, or does the project site adjoin property which is now, or was at one time, used as a solid waste management facility? ☐ Yes ☑ No

If Yes:

*i.* Has the facility been formally closed? ☐ Yes ☐ No

- If yes, cite sources/documentation: _____

*ii.* Describe the location of the project site relative to the boundaries of the solid waste management facility:

_____

_____

*iii.* Describe any development constraints due to the prior solid waste activities: _____

_____

g. Have hazardous wastes been generated, treated and/or disposed of at the site, or does the project site adjoin property which is now or was at one time used to commercially treat, store and/or dispose of hazardous waste? ☐ Yes ☑ No

If Yes:

*i.* Describe waste(s) handled and waste management activities, including approximate time when activities occurred:

_____

_____

h. Potential contamination history. Has there been a reported spill at the proposed project site, or have any remedial actions been conducted at or adjacent to the proposed site? ☐ Yes ☑ No

If Yes:

*i.* Is any portion of the site listed on the NYSDEC Spills Incidents database or Environmental Site Remediation database? Check all that apply: ☐ Yes ☐ No

☐ Yes – Spills Incidents database Provide DEC ID number(s): _____

☐ Yes – Environmental Site Remediation database Provide DEC ID number(s): _____

☐ Neither database

*ii.* If site has been subject of RCRA corrective activities, describe control measures: _____

_____

_____

*iii.* Is the project within 2000 feet of any site in the NYSDEC Environmental Site Remediation database? ☐ Yes ☐ No

If yes, provide DEC ID number(s): _____

*iv.* If yes to (i), (ii) or (iii) above, describe current status of site(s):

_____

_____

*v.* Is the project site subject to an institutional control limiting property uses? ☐ Yes ☐ No

- If yes, DEC site ID number: _____
- Describe the type of institutional control (e.g., deed restriction or easement): _____
- Describe any use limitations: _____
- Describe any engineering controls: _____
- Will the project affect the institutional or engineering controls in place? ☐ Yes ☐ No
- Explain: _____

**E.2. Natural Resources On or Near Project Site**

a. What is the average depth to bedrock on the project site? +6 feet

b. Are there bedrock outcroppings on the project site? ☐ Yes ☑ No
If Yes, what proportion of the site is comprised of bedrock outcroppings? _____%

c. Predominant soil type(s) present on project site:

| | |
|---|---|
| DwB | 100 % |
| | % |
| | % |

d. What is the average depth to the water table on the project site? Average: +6 feet

e. Drainage status of project site soils:

| | |
|---|---|
| ☑ Well Drained: | 100 % of site |
| ☐ Moderately Well Drained: | % of site |
| ☐ Poorly Drained | % of site |

f. Approximate proportion of proposed action site with slopes:

| | |
|---|---|
| ☑ 0-10%: | 100 % of site |
| ☐ 10-15%: | % of site |
| ☐ 15% or greater: | % of site |

g. Are there any unique geologic features on the project site? ☐ Yes ☑ No
If Yes, describe: _____

h. Surface water features.

*i.* Does any portion of the project site contain wetlands or other waterbodies (including streams, rivers, ponds or lakes)? ☐ Yes ☑ No

*ii.* Do any wetlands or other waterbodies adjoin the project site? ☑ Yes ☐ No

If Yes to either *i* or *ii*, continue. If No, skip to E.2.i.

*iii.* Are any of the wetlands or waterbodies within or adjoining the project site regulated by any federal, state or local agency? ☑ Yes ☐ No

*iv.* For each identified regulated wetland and waterbody on the project site, provide the following information:

- Streams: Name _____ Classification _____
- Lakes or Ponds: Name _____ Classification _____
- Wetlands: Name PEM1F Approximate Size 0.203 acre
- Wetland No. (if regulated by DEC) _____

*v.* Are any of the above water bodies listed in the most recent compilation of NYS water quality-impaired waterbodies? ☐ Yes ☑ No

If yes, name of impaired water body/bodies and basis for listing as impaired: _____

i. Is the project site in a designated Floodway? ☐ Yes ☑ No

j. Is the project site in the 100-year Floodplain? ☐ Yes ☑ No

k. Is the project site in the 500-year Floodplain? ☐ Yes ☑ No

l. Is the project site located over, or immediately adjoining, a primary, principal or sole source aquifer? ☑ Yes ☐ No
If Yes:

*i.* Name of aquifer: Principal Aquifer

m. Identify the predominant wildlife species that occupy or use the project site:

| | | |
|---|---|---|
| Rabbits | Squirrels | Skunks |
| Chipmunks | Oppossums | Foxes |
| Birds | Raccoons | |

n. Does the project site contain a designated significant natural community? ☐ Yes ☑ No

If Yes:

*i.* Describe the habitat/community (composition, function, and basis for designation): _____

*ii.* Source(s) of description or evaluation: _____

*iii.* Extent of community/habitat:

- Currently: _____ acres
- Following completion of project as proposed: _____ acres
- Gain or loss (indicate + or -): _____ acres

o. Does project site contain any species of plant or animal that is listed by the federal government or NYS as endangered or threatened, or does it contain any areas identified as habitat for an endangered or threatened species? ☑ Yes ☐ No

If Yes:

*i.* Species and listing (endangered or threatened): _____

Indiana Bat

p. Does the project site contain any species of plant or animal that is listed by NYS as rare, or as a species of special concern? ☐ Yes ☑ No

If Yes:

*i.* Species and listing: _____

q. Is the project site or adjoining area currently used for hunting, trapping, fishing or shell fishing? ☐ Yes ☑ No

If yes, give a brief description of how the proposed action may affect that use: _____

**E.3. Designated Public Resources On or Near Project Site**

a. Is the project site, or any portion of it, located in a designated agricultural district certified pursuant to Agriculture and Markets Law, Article 25-AA, Section 303 and 304? ☐ Yes ☑ No

If Yes, provide county plus district name/number: _____

b. Are agricultural lands consisting of highly productive soils present? ☐ Yes ☑ No

*i.* If Yes: acreage(s) on project site? _____

*ii.* Source(s) of soil rating(s): _____

c. Does the project site contain all or part of, or is it substantially contiguous to, a registered National Natural Landmark? ☐ Yes ☑ No

If Yes:

*i.* Nature of the natural landmark: ☐ Biological Community ☐ Geological Feature

*ii.* Provide brief description of landmark, including values behind designation and approximate size/extent: _____

d. Is the project site located in or does it adjoin a state listed Critical Environmental Area? ☐ Yes ☑ No

If Yes:

*i.* CEA name: _____

*ii.* Basis for designation: _____

*iii.* Designating agency and date: _____

e. Does the project site contain, or is it substantially contiguous to, a building, archaeological site, or district which is listed on the National or State Register of Historic Places, or that has been determined by the Commissioner of the NYS Office of Parks, Recreation and Historic Preservation to be eligible for listing on the State Register of Historic Places? ☐ Yes ☑ No

If Yes:

*i.* Nature of historic/archaeological resource: ☐ Archaeological Site ☐ Historic Building or District

*ii.* Name: _____

*iii.* Brief description of attributes on which listing is based:

_____

f. Is the project site, or any portion of it, located in or adjacent to an area designated as sensitive for archaeological sites on the NY State Historic Preservation Office (SHPO) archaeological site inventory? ☐ Yes ☑ No

g. Have additional archaeological or historic site(s) or resources been identified on the project site? ☐ Yes ☑ No

If Yes:

*i.* Describe possible resource(s): _____

*ii.* Basis for identification: _____

h. Is the project site within fives miles of any officially designated and publicly accessible federal, state, or local scenic or aesthetic resource? ☑ Yes ☐ No

If Yes:

*i.* Identify resource: Spook Hill Park

*ii.* Nature of, or basis for, designation (e.g., established highway overlook, state or local park, state historic trail or scenic byway, etc.): local park

*iii.* Distance between project and resource: <1 miles.

i. Is the project site located within a designated river corridor under the Wild, Scenic and Recreational Rivers Program 6 NYCRR 666? ☐ Yes ☑ No

If Yes:

*i.* Identify the name of the river and its designation: _____

*ii.* Is the activity consistent with development restrictions contained in 6NYCRR Part 666? ☐ Yes ☐ No

**F. Additional Information**

Attach any additional information which may be needed to clarify your project.

If you have identified any adverse impacts which could be associated with your proposal, please describe those impacts plus any measures which you propose to avoid or minimize them.

**G. Verification**

I certify that the information provided is true to the best of my knowledge.

Applicant/Sponsor Name Steven Matthews, agent on behalf of applicant Date 4/14/2023

Signature Steven Matthews Title Director of Engineering

PRINT FORM

# EAF Mapper Summary Report

Tuesday, April 11, 2023 9:29 AM

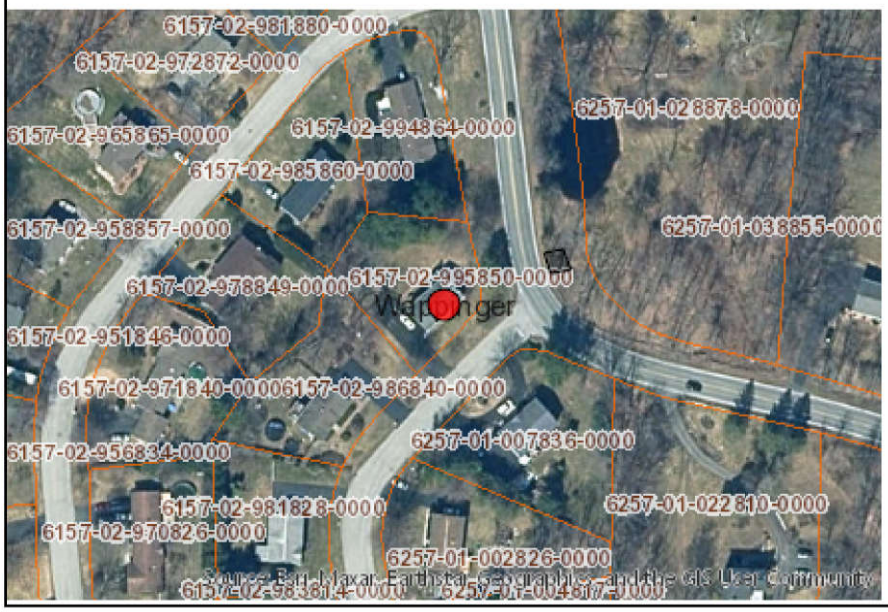


**Disclaimer:** The EAF Mapper is a screening tool intended to assist project sponsors and reviewing agencies in preparing an environmental assessment form (EAF). Not all questions asked in the EAF are answered by the EAF Mapper. Additional information on any EAF question can be obtained by consulting the EAF Workbooks. Although the EAF Mapper provides the most up-to-date digital data available to DEC, you may also need to contact local or other data sources in order to obtain data not provided by the Mapper. Digital data is not a substitute for agency determinations.


| | |
|---|---|
| B.i.i [Coastal or Waterfront Area] | No |
| B.i.ii [Local Waterfront Revitalization Area] | No |
| C.2.b. [Special Planning District] | Digital mapping data are not available or are incomplete. Refer to EAF Workbook. |
| E.1.h [DEC Spills or Remediation Site - Potential Contamination History] | Digital mapping data are not available or are incomplete. Refer to EAF Workbook. |
| E.1.h.i [DEC Spills or Remediation Site - Listed] | Digital mapping data are not available or are incomplete. Refer to EAF Workbook. |
| E.1.h.i [DEC Spills or Remediation Site - Environmental Site Remediation Database] | Digital mapping data are not available or are incomplete. Refer to EAF Workbook. |
| E.1.h.iii [Within 2,000' of DEC Remediation Site] | No |
| E.2.g [Unique Geologic Features] | No |
| E.2.h.i [Surface Water Features] | No |
| E.2.h.ii [Surface Water Features] | Yes |
| E.2.h.iii [Surface Water Features] | Yes - Digital mapping information on local and federal wetlands and waterbodies is known to be incomplete. Refer to EAF Workbook. |
| E.2.h.v [Impaired Water Bodies] | No |
| E.2.i. [Floodway] | No |
| E.2.j. [100 Year Floodplain] | No |
| E.2.k. [500 Year Floodplain] | No |
| E.2.l. [Aquifers] | Yes |
| E.2.l. [Aquifer Names] | Principal Aquifer |
| E.2.n. [Natural Communities] | No |
| E.2.o. [Endangered or Threatened Species] | Yes |

| | |
|---|---|
| E.2.o. [Endangered or Threatened Species - Name] | Indiana Bat |
| E.2.p. [Rare Plants or Animals] | No |
| E.3.a. [Agricultural District] | No |
| E.3.c. [National Natural Landmark] | No |
| E.3.d [Critical Environmental Area] | No |
| E.3.e. [National or State Register of Historic Places or State Eligible Sites] | Digital mapping data are not available or are incomplete. Refer to EAF Workbook. |
| E.3.f. [Archeological Sites] | No |
| E.3.i. [Designated River Corridor] | No |

# 617.20
# Appendix B
# State Environmental Quality Review
# VISUAL EAF ADDENDUM

This form may be used to provide additional information relating to Question 11 of Part 2 of the Full EAF.

(To be completed by Lead Agency)

**Visibility**

| | | Distance Between Project and Resource (in Miles) | | | | |
|---|---|---|---|---|---|---|
| 1. | Would the project be visible from: | 0 - ¼ | ¼ - ½ | ½ - 3 | 3 - 5 | 5+ |
| ! | *A parcel of land which is dedicated to and available to the public for the use, enjoyment and appreciation of natural or man-made scenic qualities?* Spook Hill Park | ☑ | ☐ | ☐ | ☐ | ☐ |
| ! | *An overlook or parcel of land dedicated to public observation, enjoyment and appreciation of natural or man-made scenic qualities?* | ☐ | ☐ | ☐ | ☐ | ☐ |
| ! | *A site or structure listed on the National or State Registers of Historic Places?* | ☐ | ☐ | ☐ | ☐ | ☐ |
| ! | *State Parks?* | ☐ | ☐ | ☐ | ☐ | ☐ |
| ! | *The State Forest Preserve?* | ☐ | ☐ | ☐ | ☐ | ☐ |
| ! | *National Wildlife Refuges and State Game Refuges?* | ☐ | ☐ | ☐ | ☐ | ☐ |
| ! | *National Natural Landmarks and other outstanding natural features?* | ☐ | ☐ | ☐ | ☐ | ☐ |
| ! | *National Park Service lands?* | ☐ | ☐ | ☐ | ☐ | ☐ |
| ! | *Rivers designated as National or State Wild, Scenic or Recreational?* | ☐ | ☐ | ☐ | ☐ | ☐ |
| ! | *Any transportation corridor of high exposure, such as part of the Interstate System, or Amtrak?* | ☐ | ☐ | ☐ | ☐ | ☐ |
| ! | *A governmentally established or designated interstate or inter-county foot trail, or one formally proposed for establishment or designation?* | ☐ | ☐ | ☐ | ☐ | ☐ |
| ! | *A site, area, lake, reservoir or highway designated as scenic?* | ☐ | ☐ | ☐ | ☐ | ☐ |
| ! | *Municipal park, or designated open space?* Spook Hill Park | ☑ | ☐ | ☐ | ☐ | ☐ |
| ! | *County road?* | ☐ | ☐ | ☐ | ☐ | ☐ |
| ! | *State road?* | ☐ | ☐ | ☐ | ☐ | ☐ |
| ! | *Local road?* Spook Hill Rd, Nancy Aleen Dr, Mina Dr | ☑ | ☐ | ☐ | ☐ | ☐ |

2. *Is the visibility of the project seasonal? (i.e., screened by summer foliage, but visible during other seasons)*

☐ *Yes* ☑ *No*

3. *Are any of the resources checked in question 1 used by the public during the time of year during which the project will be visible?*

☑ *Yes* ☐ *No*

***DESCRIPTION OF EXISTING VISUAL ENVIRONMENT***

*4. From each item checked in question 1, check those which generally describe the surrounding environment.*

| | Within *¼ mile | Within *1 mile |
|---|---|---|
| *Essentially undeveloped* | ☐ | ☐ |
| *Forested* | ☐ | ☐ |
| *Agricultural* | ☐ | ☐ |
| *Suburban Residential* | ☑ | ☐ |
| *Industrial* | ☐ | ☐ |
| *Commerical* | ☐ | ☐ |
| *Urban* | ☐ | ☐ |
| *River, Lake, Pond* | ☐ | ☐ |
| *Cliffs, Overlooks* | ☐ | ☐ |
| *Designated Open Space* | ☐ | ☐ |
| *Flat* | ☑ | ☐ |
| *Hilly* | ☐ | ☐ |
| *Mountainous* | ☐ | ☐ |
| *Other* | ☐ | ☐ |

***NOTE:*** *add attachments as needed*

*5. Are there visually similar projects within:*

*½ mile ☐ Yes ☑ No 1 mile ☐ Yes ☑ No 2 miles ☐ Yes ☑ No 3 miles ☐ Yes ☑ No

**Distance from project site is provided for assistance. Substitute other distances as appropriate.*

***EXPOSURE***

*6. The annual number of viewers likely to observe the proposed project is* 1.5 M *?*

***NOTE:*** *When user data is unavailable or unknown, use best estimate.*

***CONTEXT***

*7. The situation or activity in which the viewers are engaged while viewing the proposed action is:*

***FREQUENCY***

| ***Activity*** | ***Daily*** | ***Weekly*** | ***Holidays/ Weekends*** | ***Seasonally*** |
|---|---|---|---|---|
| *Travel to and from work* | ◉ | ○ | ○ | ○ |
| *Involved in recreational activities* | ◉ | ○ | ○ | ○ |
| *Routine travel by residents* | ◉ | ○ | ○ | ○ |
| *At a residence* | ◉ | ○ | ○ | ○ |
| *At worksite* | ○ | ○ | ○ | ○ |
| *Other* _____ | ○ | ○ | ○ | ○ |

Reset

SiteSafe
A QUALTEK Company

# Verizon Wireless
# Site Compliance Report

**Site Name: Spook Hill Park**
**Site Address: 15 Nancy Aleen Drive,**
**Town of Wappingers NY, 12590**
**Structure Type: Utility Pole**

Report generated on: March 9, 2023
Report by: Nicholas Pagano
Customer Contact: Wasif Sharif

---

**Verizon Wireless will be compliant with the FCC Rules and Regulations in all publicly accessible areas.**

STATE OF NEW YORK
HUGO W. JUSTINIANO
087547
LICENSED PROFESSIONAL ENGINEER
3/10/23

Site Safe, LLC
8618 Westwood Center Drive, Suite 315, Vienna, VA 22182
703.276.1100 • 703.276.1169 fax
info@sitesafe.com • www.sitesafe.com

# Table of Contents


1 EXECUTIVE SUMMARY ..... 3
2 ANALYSIS ..... 4
3 ANTENNA INVENTORY ..... 6
4 ENGINEER CERTIFICATION ..... 6
APPENDIX A – TECHNICAL FRAMEWORK: FCC RULES AND REGULATIONS ..... 8
APPENDIX B – DEFINITIONS ..... 10
APPENDIX C – STATEMENT OF LIMITING CONDITIONS ..... 11
APPENDIX D – ADDITIONAL RESOURCES ..... 12

# 1 Executive Summary

Verizon Wireless has contracted with Site Safe, LLC (Sitesafe), an independent radiofrequency (RF) regulatory and engineering consulting firm, to determine if the proposed telecommunications facility is in compliance with the Federal Communications Commission (FCC) Rules and Regulations for RF emissions (see Appendix A of this report for further explanation of the FCC Rules and Regulations). This document and the conclusions herein are based on the information provided by representatives of Verizon Wireless which is assumed to be true and correct.

Verizon Wireless is proposing to add an antenna on top of the proposed utility pole.

The analysis evaluates the telecommunications facility with respect to the General Public maximum permissible exposure (MPE) limits ("General Public" is also referred to as "Uncontrolled Environment"; see Appendix A for further explanation of this classification). Sitesafe has taken into consideration the existing/proposed Verizon Wireless antenna system as well as any other collocated antenna systems at the subject location.

Based on the analysis, Sitesafe has determined that:

**Verizon Wireless will comply** in all publicly accessible areas with the FCC Rules and Regulations governing human exposure to RF electromagnetic fields as described in 47 CFR § 1.1307(b) and 1.1310 in accordance with the methods for evaluating compliance contained in OET Bulletin 65. Additionally, Verizon Wireless will implement all required mitigation for its antennas including signage, barriers, restricted access, etc. where applicable to ensure compliance on the rooftop.

Furthermore, with the proposed Verizon Wireless antenna configuration in service, the composite exposure from this facility in all areas at ground level will be below 1% of the General Public MPE limit, or over 100 times less than the maximum allowed exposure in publicly accessible areas.

## 2 Analysis

In this analysis, Sitesafe has taken into consideration the existing/proposed Verizon Wireless antenna system as well as any other collocated antenna systems at the subject location. All existing and proposed licensees are listed in the antenna inventory table in Section 3 of this report. If specific antenna and operating parameter information for the other collocated licensees was not provided, typical assumptions were made based on Sitesafe experience and/or any available information.

Using this data, software modeling was performed for all transmitting antennas located at the site. Sitesafe has assumed a 100% duty cycle and maximum radiated power. The site has been modeled with these assumptions to determine the maximum potential RF energy density. Sitesafe believes this to be a worst-case analysis based on the best available data.

The power density calculations performed by the software tool use FCC prescribed methodologies as contained in OET Bulletin 65, which was compiled by the FCC to provide assistance in evaluating compliance with FCC guidelines for human exposure to electromagnetic fields.

As stated in Section 1, based on this analysis, the calculated ground level exposure from the Verizon Wireless antenna system alone as well as the composite exposure from all existing/proposed licensees will be below 1% of the General Public MPE limit.

Keep in mind that the FCC did not arbitrarily establish their own standards but rather adopted the recommendations of national and international organizations such as the National Council on Radiation Protection and Measurements (NCRP), the American National Standards Institute (ANSI) and the Institute of Electrical and Electronics Engineers (IEEE). These recommendations were developed by expert scientists and engineers following extensive evaluation of the potential biological effects from RF exposure. The FCC MPE limits are based on thresholds for known adverse effects, and they were designed to provide a substantial margin of safety. There is a safety factor of 50 built into the General Public MPE limits, and the predicted Verizon Wireless exposure levels are over 100 times below these very conservative limits.

In cases where such compliance exists, the subject of electromagnetic field safety is preempted by the Telecommunications Act of 1996, which states: "No state or local government or instrumentality thereof may regulate the placement, construction, and modification of personal wireless service facilities on the basis of the environmental effects of radio frequency emissions to the extent that such facilities comply with the (Federal Communication) Commission's regulations concerning such emissions."

Lastly, the graph below provides a visual depiction of the rather insignificant electromagnetic field exposure contribution from the Verizon Wireless antenna system at any distance from the base of the structure. This portrays how low the Verizon Wireless contribution is when compared to the General Public MPE limit.

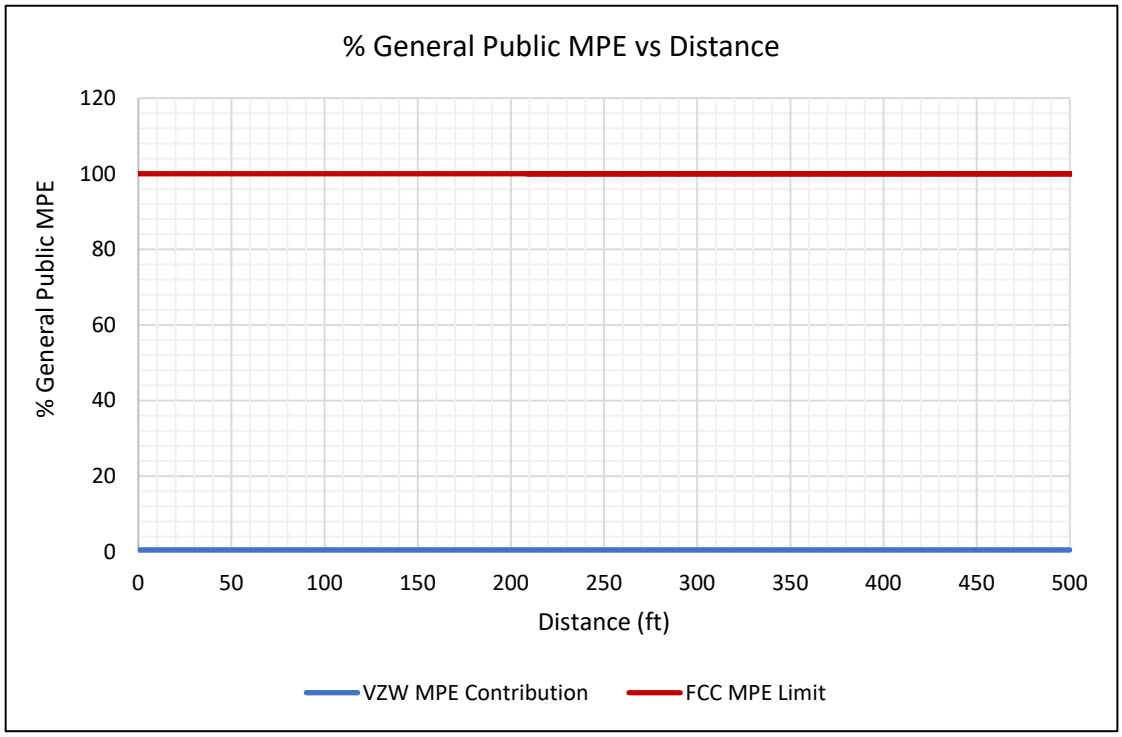

## 3 Antenna Inventory

The following antenna inventory contains data provided by the customer and/or gathered by Sitesafe personnel which was used to perform the analysis:

| Ant ID | Operator | Antenna Make & Model | Type | TX Freq (MHz) | Tech | Az (Deg) | Hor BW (Deg) | Ant Len (ft) | Ant Gain (dBd) | Power | Power Type | Power Units | # of Trans | Total ERP (Watts) | Z | MDT | EDT |
|---|---|---|---|---|---|---|---|---|---|---|---|---|---|---|---|---|---|
| 1 | VERIZON WIRELESS | Commscope NNV4SSP-360S-F2 | Omni | 751 | LTE | 0 | 360.0 | 2 | 2.55 | 40 | TPO | Watt | 4 | 287.82 | 45.5' | 0 | 0 |
| 1 | VERIZON WIRELESS | Commscope NNV4SSP-360S-F2 | Omni | 850 | LTE | 0 | 360.0 | 2 | 2.61 | 40 | TPO | Watt | 4 | 291.82 | 45.5' | 0 | 0 |
| 1 | VERIZON WIRELESS | Commscope NNV4SSP-360S-F2 | Omni | 1900 | LTE | 0 | 360.0 | 2 | 5.82 | 40 | TPO | Watt | 4 | 611.11 | 45.5' | 0 | 0 |
| 1 | VERIZON WIRELESS | Commscope NNV4SSP-360S-F2 | Omni | 2100 | LTE | 0 | 360.0 | 2 | 5.93 | 40 | TPO | Watt | 4 | 626.79 | 45.5' | 0 | 0 |
| 1 | VERIZON WIRELESS | Commscope NNV4SSP-360S-F2 | Omni | 3500 | LTE/CBRS | 0 | 360.0 | 2 | 4.05 | 5 | TPO | Watt | 4 | 50.82 | 45.5' | 0 | 0 |

Notes: Each row with the same number in the *Ant #* column references the same physical antenna. Proposed equipment is tagged as *(Proposed)* under *Operator* or *Antenna Make and Model*. Power values provided by the client and used in the analysis may be greater than what is initially deployed. For additional modeling information, refer to Appendix B of this report.

Note: Antenna has a fixed 2 degree tilt for low-band and mid-band frequencies and a fixed 0 degree tilt for CBRS.

# 4 Engineer Certification

The Professional engineer whose seal appears on the cover of this document herby certifies and affirms:

That I am registered as a Professional Engineer in the jurisdiction indicated in the professional engineering stamp on the cover of this document; and

That I am providing professional engineering services on behalf of QualTek Engineering, P.C., and am an employee of QualTek Wireless, LLC, sister company to Site Safe, LLC (both under the parent company QualTek); and

That I am thoroughly familiar with the Rules and Regulations of the Federal Communications Commission (FCC) as well as the regulations of the Occupational Safety and Health Administration (OSHA), both in general and specially as they apply to the FCC Guidelines for Human Exposure to Radio Frequency Electromagnetic Fields; and

That I have thoroughly reviewed this Site Compliance Report and believe it to be true and accurate to the best of my knowledge as assembled by and attested to by Nicholas Pagano.

March 9, 2023

## Appendix A – Technical Framework: FCC Rules and Regulations

In 1996, the FCC adopted regulations for evaluating of the effects of RF emissions in 47 CFR § 1.1307(b) and 1.1310. The guideline from the FCC Office of Engineering and Technology is Bulletin 65 (OET Bulletin 65), *Evaluating Compliance with FCC Guidelines for Human Exposure to Radio Frequency Electromagnetic Fields*, Edition 97-01, published August 1997. Since 1996, the FCC periodically reviews these rules and regulations as per its congressional mandate.

FCC regulations define two separate tiers of exposure limits: Occupational or "Controlled Environment" and General Public or "Uncontrolled Environment". The General Public limits are generally five times more conservative or restrictive than the Occupational limits.

General Public or Uncontrolled limits apply to *accessible* areas where workers or the general public may be exposed to RF electromagnetic fields.

Occupational or Controlled limits apply in situations in which persons are exposed as a consequence of their employment and where those persons exposed have been made fully aware of the potential for exposure and can exercise control over their exposure. An area is considered a Controlled environment when access is limited to these aware personnel. Typical criteria are restricted access (e.g. locked or alarmed doors, barriers, etc.) to the areas where antennas are located coupled with proper RF warning signage.

A site with Controlled environments is evaluated with Occupational limits. All other areas are considered Uncontrolled environments. If a site has no access controls or no RF warning signage, it is evaluated with General Public limits.

The theoretical modeling of the RF electromagnetic fields has been performed in accordance with OET Bulletin 65. The MPE limits utilized in this analysis are outlined in the following diagram and table:

## FCC Limits for Maximum Permissible Exposure (MPE)

**Plane-wave Equivalent Power Density**

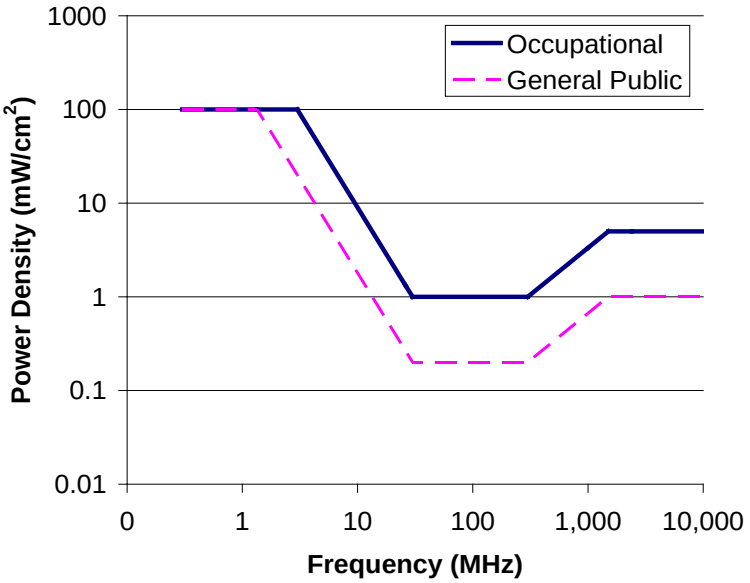


### Limits for Occupational/Controlled Exposure (MPE)

| Frequency Range (MHz) | Electric Field Strength (E) (V/m) | Magnetic Field Strength (H) (A/m) | Power Density (S) (mW/cm$^2$) | Averaging Time $\|E\|^2$, $\|H\|^2$ or S (minutes) |
|---|---|---|---|---|
| 0.3-3.0 | 614 | 1.63 | (100)* | 6 |
| 3.0-30 | 1842/f | 4.89/f | (900/f$^2$)* | 6 |
| 30-300 | 61.4 | 0.163 | 1.0 | 6 |
| 300-1500 | -- | -- | f/300 | 6 |
| 1500-100,000 | -- | -- | 5 | 6 |

### Limits for General Population/Uncontrolled Exposure (MPE)

| Frequency Range (MHz) | Electric Field Strength (E) (V/m) | Magnetic Field Strength (H) (A/m) | Power Density (S) (mW/cm$^2$) | Averaging Time $\|E\|^2$, $\|H\|^2$ or S (minutes) |
|---|---|---|---|---|
| 0.3-1.34 | 614 | 1.63 | (100)* | 30 |
| 1.34-30 | 824/f | 2.19/f | (180/f$^2$)* | 30 |
| 30-300 | 27.5 | 0.073 | 0.2 | 30 |
| 300-1500 | -- | -- | f/1500 | 30 |
| 1500-100,000 | -- | -- | 1.0 | 30 |

f = frequency in MHz *Plane-wave equivalent power density

## Appendix B – Definitions

***Compliance*** – The determination of whether a site complies with FCC standards with regards to Human Exposure to Radio Frequency Electromagnetic Fields from transmitting antennas.

***Decibel (dB)*** – A unit for measuring power or strength of a signal.

***Duty Cycle*** – The percent of pulse duration to the pulse period of a periodic pulse train. Also, may be a measure of the temporal transmission characteristic of an intermittently transmitting RF source. A duty cycle of 100% corresponds to continuous operation.

***Effective (or Equivalent) Isotropic Radiated Power (EIRP)*** – The product of the power supplied to the antenna and the antenna gain in a given direction relative to an isotropic antenna.

***Effective Radiated Power (ERP)*** – The product of the power supplied to the antenna and the antenna gain in a given direction relative to a half-wave dipole antenna.

***Gain (of an antenna)*** – The ratio, usually expressed in decibels, of the power required at the input of a loss-free reference antenna to the power supplied to the input of the given antenna to produce, in a given direction, the same field strength or the same power density at the same distance. When not specified otherwise, the gain refers to the direction of maximum radiation. Gain may be considered for a specified polarization. Gain may be referenced to an isotropic antenna (dBi) or a half-wave dipole (dBd) antenna.

***Generic Antenna*** – For the purposes of this report, the use of "Generic" as an antenna model means the antenna information was not provided. In the event of unknown information, Sitesafe will use its industry specific knowledge of antenna models to select a worst-case scenario antenna to model the site.

***Maximum Permissible Exposure (MPE)*** – The rms and peak electric and magnetic field strength, their squares, or the plane-wave equivalent power densities associated with these fields to which a person may be exposed without harmful effect and with acceptable safety factor.

***OET Bulletin 65*** – Technical guideline developed by the FCC's Office of Engineering and Technology to determine the impact of RF exposure on humans. The guideline was published in August 1997.

***Radio Frequency Exposure or Electromagnetic Fields*** – Electromagnetic waves that are propagated from antennas through space.

## Appendix C – Statement of Limiting Conditions

Sitesafe will not be responsible for matters of a legal nature that affect the site or property.

Due to the complexity of some wireless sites, Sitesafe performed this analysis and created this report utilizing best industry practices and due diligence. Sitesafe cannot be held accountable or responsible for anomalies or discrepancies due to actual site conditions or information or data supplied by Verizon Wireless, the site manager, or their affiliates, subcontractors or assigns.

Sitesafe obtained information used in this Site Compliance Report from sources that Sitesafe considers reliable and believes them to be true and correct. Sitesafe does not assume any responsibility for the accuracy of such items that were furnished by other parties. When conflicts in information occur between data provided by a second party and physical data collected by Sitesafe, the physical data will be used.

## Appendix D – Additional Resources

Additional RF information is available at the following sites:
https://www.fcc.gov/general/radio-frequency-safety-0
https://www.fcc.gov/engineering-technology/electromagnetic-compatibility-division/radio-frequency-safety/faq/rf-safety

Tectonic
PRACTICAL SOLUTIONS. EXCEPTIONAL SERVICE.

Date: **April 14, 2023**

# Utility Pole Analysis Report

**Carrier:** Verizon Wireless

**Carrier Designation:**

**Project #:** 20222384944
**Location Code:** 729798
**Site Name:** Spook Hill Park
**Site Data:** Adjacent to 15 Nancy Aleen Drive, Wappingers Falls, NY 12590
Latitude 41.587197°, Longitude -73.893917°
Proposed 43.0 ft Tall Wood Pole

**Tectonic Project Number:** 11861.002

*Tectonic Engineering Consultants, Geologists & Land Surveyors, D.P.C.* is pleased to submit this **"Utility Pole Analysis Report"** to determine the structural integrity of the above mentioned pole.

The purpose of the analysis is to determine acceptability of the pole stress level. Based on our analysis we have determined the pole stress level to be:

Structure: **Sufficient – 72% Utilization**

The pole **has sufficient capacity** for the proposed Verizon Wireless installation. No reinforcement or modifications are required at this time.

This analysis has been performed in accordance with the National Electrical Safety Code - 2017 Edition.

This structural assessment is also based on a limited visual inspection from the ground. The contractor shall field verify all existing conditions and notify the design engineer of any discrepancies prior to the installation of the proposed equipment.

We appreciate the opportunity of providing our continuing professional services to you and Verizon Wireless. If you have any questions or need further assistance on this or any other projects please give us a call.

Structural analysis prepared by: Veronica Elson

Respectfully submitted by:
*Tectonic Engineering Consultants, Geologists & Land Surveyors, D.P.C.*


Veronica E. Elson, PE
Project Manager

**Project Contact Info**

36 British American Boulevard, Suite 101 | Latham, NY 12110
518.783.1630 Tel | 518.783.1544 Fax

tectonicengineering.com
Equal Opportunity Employer

## 1) ANALYSIS CRITERIA

**NESC Criteria:** 2017
**NESC Load Case:** Rule 250B
**Wind Pressure with Ice:** 4 psf (approx. 40 mph)
**Ice Thickness:** 0.5"
**Construction Grade:** B
**Wood Pole Class:** 2

Table 1 - Loading Information

| Height AGL (ft) | Carrier Designation | Quantity | Equipment Description | Mount Type | Note |
|---|---|---|---|---|---|
| 45.2 | Verizon Wireless | 1 | 4G Antenna (Commscope V4SSPP-360S-F) | Pole Top Antenna Mount | 1 |
| 34.5 | - | 1 | Secondary Conductor | - | |
| 28.0 | Verizon Wireless | 1 | Fiber Line | - | |
| 25.7 | | 1 | Fiber Demarc/MOPT Terminal | - | |
| 13.0 | Verizon Wireless | 1 | Equipment Shroud | - | |
| 9.0 | | 1 | 100A Subpanel | - | |
| | | 1 | Load Center | Unistrut | |
| 6.0 | | 1 | Electric Meter | | |

Note:
1) Proposed equipment to be installed

## 2) ANALYSIS PROCEDURE

Table 2 - Documents Utilized

| Document | Remarks | Dated |
|---|---|---|
| Site Visit Photos & Notes | Tectonic | 01/14/23 |
| Preliminary Zone Drawings | Tectonic | 04/14/23 |

### 2.1) Analysis Method

O-Calc Pro (Version 6.02), a commercially available analysis software package, was used to create a three-dimensional model of the pole to calculate the member stresses for a variety of load combinations. A summary of this analysis is attached to the end of this report.

## 2.2) Assumptions

1) The pole was properly installed and maintained in good condition in accordance with its original design and/or manufacturer's specifications.
2) Pole wood species is similar to Southern Pine.
3) The pole is embedded into the ground as per the applicable design requirements based on its height above grade and diameter at grade.
4) The pole has been embedded sufficiently so that its soil lateral capacity meets or exceeds the moment capacity of the pole.
5) Attachment heights, spans, span lines, line sags, line angles, and appurtenances are estimated based on information obtained during the site visit referenced above or via Google Earth.
6) All messenger lines are assumed to be a minimum diameter of 1/4" and meet or exceed the requirements of extra high strength (EHS) galvanized strand cable.
7) The proposed secondary power line is assumed not to exceed 500 lbs of tension.
8) The proposed fiber may be installed on a messenger with a max tension of 500 lbs.

## 3) ANALYSIS RESULTS & RECOMMENDATIONS

The pole <u>has sufficient capacity</u> for the proposed Verizon Wireless installation. No reinforcement or modifications are required at this time.

| | | | | | | | |
|---|---|---|---|---|---|---|---|
| Pole Num: | **TBD** | Pole Length / Class: | **50 / 2** | Code: | **NESC** | Structure Type: | **Deadend** |
| Aux Data 1 | **Site Name: Spook Hill Park** | Species: | **SOUTHERN PINE** | NESC Rule: | **Rule 250B** | Status | **Unguyed** |
| Aux Data 2 | **Client: Verizon Wireless** | Setting Depth (ft): | **7.0** | Construction Grade: | **B** | Pole Strength Factor: | **0.65** |
| Aux Data 3 | **WO: 11861.002** | G/L Circumference (in): | **41.61** | Loading District: | **Heavy** | Transverse Wind LF: | **2.50** |
| Aux Data 4 | **Unset** | G/L Fiber Stress (psi): | **8,000** | Ice Thickness (in): | **0.50** | Wire Tension LF: | **1.65** |
| Aux Data 5 | **Unset** | Allowable Stress (psi): | **5,200** | Wind Speed (mph): | **39.53** | Vertical LF: | **1.50** |
| Aux Data 6 | **Unset** | Fiber Stress Ht. Reduc: | **No** | Wind Pressure (psf): | **4.00** | | |
| Latitude: | **41.587197** | Longitude: | | **-73.893917** | | Elevation: | **238'** |

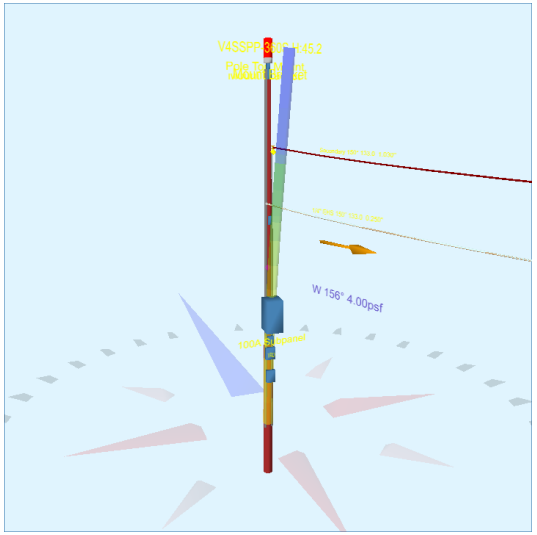


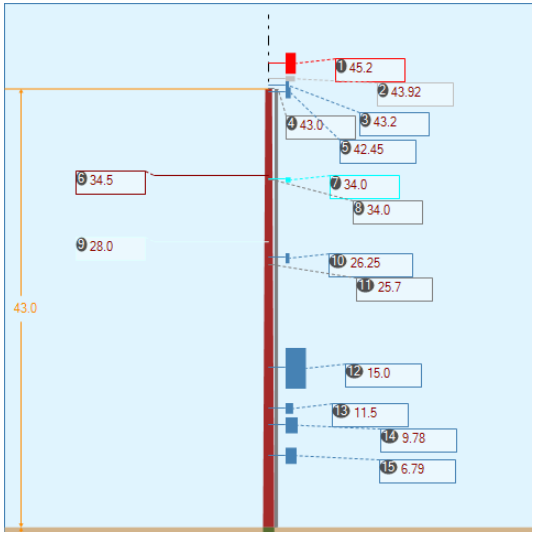


| Pole Capacity Utilization (%) | | Height (ft) | Wind Angle (deg) |
|---|---|---|---|
| Maximum | **71.5** | 0.0 | 155.6 |
| Groundline | **71.5** | 0.0 | 155.6 |
| Vertical | **8.8** | 22.0 | 155.6 |

| Pole Moments (ft-lb) | | Load Angle (deg) | Wind Angle (deg) |
|---|---|---|---|
| Max Cap Util | **70,177** | 152.4 | 155.6 |
| Groundline | **70,177** | 152.4 | 155.6 |
| GL Allowable | **98,873** | | |

**Groundline Load Summary - Reporting Angle Mode: Load - Reporting Angle: 152.4°**

| | Shear Load* (lbs) | Applied Load (%) | Bending Moment (ft-lb) | Applied Moment (%) | Pole Capacity (%) | Bending Stress (+/- psi) | Vertical Load (lbs) | Vertical Stress (psi) | Total Stress (psi) | Pole Capacity (%) |
|---|---|---|---|---|---|---|---|---|---|---|
| Powers | 825 | 33.8 | **28,721** | 40.9 | **29.1** | **1,498** | 135 | 1 | **1,499** | **28.8** |
| Comms | 825 | 33.8 | **23,200** | 33.1 | **23.5** | **1,210** | 148 | 1 | **1,211** | **23.3** |
| GenericEquipments | 244 | 10.0 | **5,404** | 7.7 | **5.5** | **282** | 735 | 5 | **287** | **5.5** |
| Pole | 379 | 15.5 | **8,129** | 11.6 | **8.2** | **424** | 2,422 | 18 | **442** | **8.5** |
| Risers | 169 | 6.9 | **4,700** | 6.7 | **4.8** | **245** | 219 | 2 | **247** | **4.7** |
| Insulators | 1 | 0.0 | **24** | 0.0 | **0.0** | **1** | 26 | 0 | **1** | **0.0** |
| Pole Load | 2,443 | 100.0 | **70,177** | 100.0 | **71.0** | **3,661** | 3,684 | 27 | **3,688** | **70.9** |
| Pole Reserve Capacity | | | **28,696** | | **29.0** | **1,539** | | | **1,512** | **29.1** |

**Load Summary by Owner - Reporting Angle Mode: Load - Reporting Angle: 152.4°**

| | Shear Load* (lbs) | Applied Load (%) | Bending Moment (ft-lb) | Applied Moment (%) | Pole Capacity (%) | Bending Stress (+/- psi) | Vertical Load (lbs) | Vertical Stress (psi) | Total Stress (psi) | Pole Capacity (%) |
|---|---|---|---|---|---|---|---|---|---|---|
| <Undefined> | 825 | 33.8 | **28,745** | 41.0 | **29.1** | **1,500** | 145 | 1 | **1,501** | **28.9** |
| VZW | 1,238 | 50.7 | **33,303** | 47.5 | **33.7** | **1,737** | 1,117 | 8 | **1,745** | **33.6** |
| Pole | 379 | 15.5 | **8,129** | 11.6 | **8.2** | **424** | 2,422 | 18 | **442** | **8.5** |
| **Totals:** | 2,443 | 100.0 | **70,177** | 100.0 | **71.0** | **3,661** | 3,684 | 27 | **3,688** | **70.9** |

**Detailed Load Components:**

| **Power** | | Owner | Height (ft) | Horiz. Offset (in) | Cable Diameter (in) | Sag at Max Temp (ft) | Cable Weight (lbs/ft) | Lead/Span Length (ft) | Span Angle (deg) | Wire Length (ft) | Tension (lbs) | Tension Moment* (ft-lb) | Offset Moment* (ft-lb) | Wind Moment* (ft-lb) | Moment at GL* (ft-lb) |
|---|---|---|---|---|---|---|---|---|---|---|---|---|---|---|---|
| Secondary | TRIPLEX 1/0 | | 34.50 | 7.00 | 1.0300 | 2.37 | 0.399 | 133.0 | 150.0 | 133.1 | 500 | 28,669 | 37 | 16 | 28,721 |
| | | | | | | | | | | | **Totals:** | **28,669** | **37** | **16** | **28,721** |

| **Comm** | | Owner | Height (ft) | Horiz. Offset (in) | Cable Diameter (in) | Sag at Max Temp (ft) | Cable Weight (lbs/ft) | Lead/Span Length (ft) | Span Angle (deg) | Wire Length (ft) | Tension (lbs) | Tension Moment* (ft-lb) | Offset Moment* (ft-lb) | Wind Moment* (ft-lb) | Moment at GL* (ft-lb) |
|---|---|---|---|---|---|---|---|---|---|---|---|---|---|---|---|
| Overlashed Bundle | 1/4" EHS | VZW | 28.00 | 7.40 | 0.2500 | 2.46 | 0.121 | 133.0 | 150.0 | 133.1 | 500 | 23,267 | -35 | 10 | 23,243 |
| Fiber | Proposed Fiber Line | VZW | 27.96 | 7.40 | 0.8970 | | 0.338 | 133.0 | 150.0 | 133.1 | | | -47 | 4 | -43 |
| | | | | | | | | | | | **Totals:** | **23,267** | **-81** | **14** | **23,200** |

| GenericEquipment | | Owner | Height (ft) | Horiz. Offset (in) | Offset Angle (deg) | Rotate Angle (deg) | Unit Weight (lbs) | Unit Height (in) | Unit Depth (in) | Unit Diameter (in) | Unit Length (in) | Offset Moment* (ft-lb) | Wind Moment* (ft-lb) | Moment at GL* (ft-lb) |
|---|---|---|---|---|---|---|---|---|---|---|---|---|---|---|
| Cylinder | V4SSPP-360S | VZW | 45.20 | 0.15 | 0.0 | 0.0 | 29.32 | 24.41 | -- | 12.01 | -- | 0 | 926 | 927 |
| Cylinder | Antenna Mounting Cradle | VZW | 43.92 | 0.15 | 180.0 | 0.0 | 5.00 | 6.38 | -- | 11.00 | -- | 0 | 222 | 222 |
| Box | Pole Top Mount | VZW | 43.20 | 0.10 | 0.0 | 0.0 | 100.00 | 10.00 | 4.00 | -- | 4.00 | -1 | 202 | 201 |
| Box | Mount Bracket | VZW | 42.45 | 5.10 | 0.0 | 0.0 | 10.00 | 13.00 | 2.00 | -- | 6.00 | -6 | 344 | 338 |
| Box | Mount Bracket | VZW | 42.45 | 4.90 | 180.0 | 0.0 | 10.00 | 13.00 | 2.00 | -- | 6.00 | 5 | 344 | 349 |
| Cylinder | Weatherhead | VZW | 34.00 | 7.53 | 120.0 | 0.0 | 1.50 | 6.00 | -- | 6.00 | -- | 1 | 86 | 87 |
| Box | Fiber Demarcation Box | VZW | 26.25 | 7.61 | 180.0 | 0.0 | 0.44 | 12.00 | 4.00 | -- | 4.50 | 0 | 155 | 156 |
| Box | Equipment Shroud | VZW | 15.00 | 19.70 | 180.0 | 0.0 | 279.00 | 48.00 | 26.00 | -- | 24.00 | 614 | 1,963 | 2,577 |
| Box | 100A Subpanel | VZW | 11.50 | 10.70 | 180.0 | 0.0 | 15.00 | 12.65 | 4.27 | -- | 8.88 | 18 | 102 | 120 |
| Box | Electric Disconnect | VZW | 9.78 | 10.51 | 180.0 | 0.0 | 15.00 | 18.75 | 3.88 | -- | 14.31 | 18 | 232 | 250 |
| Box | Electric Meter | VZW | 6.79 | 11.18 | 180.0 | 0.0 | 25.00 | 19.00 | 4.84 | -- | 13.00 | 31 | 146 | 177 |
| | | | | | | | | | | | **Totals:** | **682** | **4,722** | **5,404** |

| Riser | | Owner | Height (ft) | Horiz. Offset (in) | Offset Angle (deg) | Rotate Angle (deg) | Unit Weight (lbs) | Unit Height (in) | Unit Depth (in) | Unit Diameter (in) | Unit Length (in) | Offset Moment* (ft-lb) | Wind Moment* (ft-lb) | Moment at GL* (ft-lb) |
|---|---|---|---|---|---|---|---|---|---|---|---|---|---|---|
| VZW U-Guard 225.0° H:43.0 | VZW U-Guard | VZW | 43.00 | 6.81 | 225.0 | 225.0 | 86.00 | 516.00 | 4.00 | 4.00 | 516.00 | 14 | 3,871 | 3,885 |
| 1.5" STD Secondary Conduit 120.0° H:34.0 | 1.5" STD Secondary Conduit | VZW | 34.00 | 6.81 | 120.0 | 120.0 | 34.00 | 408.00 | 1.90 | 1.90 | 408.00 | 16 | 715 | 731 |
| Fiber Conduit 150.0° H:25.7 | Fiber Conduit | VZW | 25.70 | 6.81 | 150.0 | 150.0 | 25.70 | 308.40 | 1.90 | 1.90 | 308.40 | 14 | 69 | 83 |
| | | | | | | | | | | | **Totals:** | **45** | **4,655** | **4,700** |

| Insulator | | Owner | Height (ft) | Horiz. Offset (in) | Offset Angle (deg) | Rotate Angle (deg) | Unit Weight (lbs) | Unit Diameter (in) | Unit Length (in) | Offset Moment* (ft-lb) | Wind Moment* (ft-lb) | Moment at GL* (ft-lb) |
|---|---|---|---|---|---|---|---|---|---|---|---|---|
| Spool | Spool 3" | | 34.50 | 0.00 | 90.0 | 0.0 | 2.00 | 3.00 | 3.19 | 0 | 23 | 23 |
| Bolt | Single Bolt | | 28.00 | 0.00 | 0.0 | 0.0 | 5.00 | 3.00 | 0.10 | 0 | 1 | 1 |
| Bolt | Single Bolt | VZW | 9.00 | 0.00 | 180.0 | 180.0 | 5.00 | 3.00 | 0.10 | 0 | 0 | 0 |
| Bolt | Single Bolt | VZW | 6.00 | 0.00 | 180.0 | 180.0 | 5.00 | 3.00 | 0.10 | 0 | 0 | 0 |
| | | | | | | | | | **Totals:** | **0** | **24** | **24** |

| Pole Buckling | | | | | | | | | | | | | |
|---|---|---|---|---|---|---|---|---|---|---|---|---|---|
| Buckling Constant | Buckling Column Height* (ft) | Buckling Section Height (% Buckling Col. Hgt.) | Buckling Section Diameter (in) | Minimum Buckling Diameter at GL (in) | Diameter at Tip (in) | Diameter at GL (in) | Modulus of Elasticity (psi) | Pole Density (pcf) | Ice Density (pcf) | Pole Tip Height (ft) | Buckling Load Capacity at Height (lbs) | Buckling Load Applied at Height (lbs) | Buckling Load Factor of Safety |
| 2.00 | 22.04 | 33.07 | 12.35 | 7.21 | 7.96 | 13.25 | 1.60e+6 | 60.00 | 57.00 | 43.00 | 41,885 | **418.60** | **11.36** |